micromeritics®

AccuPyc II 1340
with FoamPyc Option

Operator's Manual

V1.09

134-42803-01
Oct 2013

WARRANTY

MICROMERITICS INSTRUMENT CORPORATION warrants for one year from the date of shipment each instrument it manufactures to be free from defects in material and workmanship impairing its usefulness under normal use and service conditions except as noted herein.

Our liability under this warranty is limited to repair, servicing and adjustment, free of charge at our plant, of any instrument or defective parts when returned prepaid to us and which our examination discloses to have been defective. The purchaser is responsible for all transportation charges involving the shipment of materials for warranty repairs. Failure of any instrument or product due to operator error, improper installation, unauthorized repair or alteration, failure of utilities, or environmental contamination will not constitute a warranty claim. The materials of construction used in MICROMERITICS instruments and other products were chosen after extensive testing and experience for their reliability and durability. However, these materials cannot be totally guaranteed against wear and/or decomposition by chemical action (corrosion) as a result of normal use.

Repair parts are warranted to be free from defects in material and workmanship for 90 days from the date of shipment.

No instrument or product shall be returned to MICROMERITICS prior to notification of alleged defect and authorization to return the instrument or product. All repairs or replacements are made subject to factory inspection of returned parts.

MICROMERITICS shall be released from all obligations under its warranty in the event repairs or modifications are made by persons other than its own authorized service personnel unless such work is authorized in writing by MICROMERITICS.

The obligations of this warranty will be limited under the following conditions:

1. Certain products sold by MICROMERITICS are the products of reputable manufacturers, sold under their respective brand names or trade names. We, therefore, make no express or implied warranty as to such products. We shall use our best efforts to obtain from the manufacturer, in accordance with his customary practice, the repair or replacement of such of his products that may prove defective in workmanship or materials. Service charges made by such manufacturer are the responsibility of the ultimate purchaser. This states our entire liability in respect to such products, except as an authorized person of MICROMERITICS may otherwise agree to in writing.

2. If an instrument or product is found defective during the warranty period, replacement parts may, at the discretion of MICROMERITICS, be sent to be installed by the purchaser, e.g., printed circuit boards, check valves, seals, etc.

3. Expendable items, e.g., sample tubes, detector source lamps, indicator lamps, fuses, valve plugs (rotor) and stems, seals and O-rings, ferrules, etc., are excluded from this warranty except for manufacturing defects. Such items which perform satisfactorily during the first 45 days after the date of shipment are assumed to be free of manufacturing defects.

Purchaser agrees to hold MICROMERITICS harmless from any patent infringement action brought against MICROMERITICS if, at the request of the purchaser, MICROMERITICS modifies a standard product or manufactures a special product to the purchaser's specifications.

MICROMERITICS shall not be liable for consequential or other type damages resulting from the use of any of its products other than the liability stated above. This warranty is in lieu of all other warranties, express or implied, including, but not limited to, the implied warranties of merchantability or fitness for use.

4356 Communications Drive • Norcross, GA 30093-1877 • Fax (770) 662-3696

Domestic Sales - (770) 662-3633
International Sales - (770) 662-3660
Domestic Repair Service - (770) 662-3666
Customer Service - (770) 662-3636

Form No. 008-42104-00
Rev. 12/95

TABLE OF CONTENTS

1. GENERAL INFORMATION

2. INSTALLATION

B. USER INTERFACE

4. GENERAL OPERATING INSTRUCTIONS

5. TROUBLESHOOTING AND MAINTENANCE

6. ORDERING INFORMATION

A. ERROR MESSAGES

B. CALCULATIONS

C. THEORY

D. TRANSMITTED DATA

E. MULTIPLE ANALYSIS MODULES

F. TEMPERATURE-CONTROLLED ACCUPYC

G. SUPPORTED PRINTERS

H. RS-232 PIN ASSIGNMENT

I. KEYBOARD INTERFACE

J. MULTIVOLUME INSERTS

K. MULTIGAS OPTION

INDEX

1. GENERAL INFORMATION

This manual describes how to install, operate, and maintain the AccuPyc II 1340 Pycnometer.

Organization of the Manual

The manual is divided into sections as follows:

Chapter 1 **GENERAL INFORMATION**

Provides a general description and specifications of the pycnometer.

Chapter 2 **INSTALLATION**

Provides unpacking and inspection information, and installation instructions.

Chapter 3 **USER INTERFACE**

Provides hardware and software interface.

Chapter 4 **GENERAL OPERATING INSTRUCTIONS**

Provides step-by-step instructions for preparing and starting an analysis.

Chapter 5 **TROUBLESHOOTING AND MAINTENANCE**

Provides troubleshooting and maintenance procedures and error messages.

Chapter 6 **ORDERING INFORMATION**

Provides information on ordering parts and accessories for the pycnometer.

Appendix A **ERROR MESSAGES**

Provides a listing of error messages that may be displayed by the analysis program, as well as causes and actions for each.

Appendix B **CALCULATIONS**

Contains the calculations used by the software to produce reports.

Appendix C **THEORY**

Provides a discussion on the theory related to the analysis and calibration operations.

Appendix D **TRANSMITTED DATA**

Provides the format for analysis and calibration data when transmitted to a serial printer.

Appendix E **MULTIPLE ANALYSIS MODULES**

Provides instructions on attaching multiple analysis modules.

Appendix F **TEMPERATURE-CONTROLLED ACCUPYC**

Provides instructions for attaching a bath circulator to the temperature-controlled AccuPyc.

Appendix G **SUPPORTED PRINTERS**

Provides a list of printers supported by the AccuPyc.

Appendix H **RS-232 PIN ASSIGNMENT**

Lists the pin assignments for the RS232 port.

Appendix I **KEYBOARD INTERFACE**

Lists computer keyboard equivalents for the analyzer keypad.

Appendix J **MULTIVOLUME INSERTS**

Provides instructions for using Multivolume inserts.

Appendix K **MULTIGAS OPTION**

Provides instructions for attaching and using the Multigas option.

Index **INDEX**

Provides quick access to a subject matter

Conventions

This manual uses the icons shown below to identify notes of importance, cautions, and warnings.

Notes contain important information pertinent to the subject matter.

Warnings contain information that help you prevent actions that may cause personal injury.

Cautions contain information that help you prevent actions that may damage the analyzer.

Equipment Description

The AccuPyc II 1340 Pycnometer is an easy-to-use, fully automatic gas displacement pycnometer. Analyses are started with a few keystrokes and after that, data are collected, calculations performed, and results displayed without further operator intervention. The pycnometer may be operated in five different languages: English, French, German, Italian, or Spanish.

The AccuPyc II 1340 Pycnometer determines density and volume by measuring the pressure change of helium within calibrated volumes. The current pressure and chamber temperature are displayed alternately on the pycnometer display.

The FoamPyc option enables you to perform analyses on materials such as polystyrene, urethane, and rubber foams using five different methods.

- **Method A**: This method measures the closed cell fraction and corrects for the cells damaged while cutting the sample to the necessary size and shape. This is accomplished by using either the average cell diameter or the cell chord length (as defined in ASTM method D-3576) and the measurements of the sample to determine the volume of the cut cells. This volume is deducted from the total volume of the open cells measured by the 1330 pycnometer.

- **Method B:** This method corrects for the cut cells by using two separate measurements. For the 2nd measurement, the sample is recut to double the amount of cut surface. The observed difference in cut open cell volume is applied as a correction to the initial measured volume. This method offers the distinct advantage that no assumptions are needed about the relative amounts of open and closed cells.

- **Method C**: This method does not correct for cut cells. It is used for materials with predominantly open cells where good accuracy can be achieved without correction. The accuracy level deteriorates as the percentage of closed cells increases.

- **Method D**: This method is a compressibility test. The fill pressure is increased incrementally over the sample with each repeat of the P1,P2* cycle. The apparent variation of the measured sample volume with the average pressure is determined. This test is an approximate indication. It is not intended to be an exact measure of the volume compressibility.

- **Method E**: This method is a cell fracture test; a perfectly rigid foam is assumed. First, a P1,P2* cycle is performed at the lower of two specified P1 pressures, and the results stored. A second cycle is performed at a higher specified value of P1, then a third cycle identical to the first cycle is performed. The difference between the volume of the sample on the first measurement and on the third measurement is reported as the volume of fractured cells. It is assumed that cells fracture by exposure to the highest pressure (2nd cycle) so that when the third measurement is made, the measured sample volume has decreased from the first cycle by the amount of the closed cell volume which was fractured.

The 100-cm^3 AccuPyc is most suitable for FoamPyc analyses. However, depending on the sample material, the 10- or 350-cm^3 analysis unit can also be used. FoamPyc analyses cannot be performed using the 1-cm^3 unit. There are references to the 1-cm^3 unit in this manual because the Standard method is included with the FoamPyc software. It is feasible that a 1-cm^3 analysis module could be attached to the control module for standard analyses.

The AccuPyc II 1340 Pycnometer consists of a control module with a built-in keypad and display area, and an analysis module. When ordering a single unit, the analysis module is built into the same unit as the control module for convenience. You can also attach up to five additional analysis modules to one control module (six total), enabling you to accommodate different sizes of samples. Each module has its own gas connection. The pycnometer is controlled by commands entered through the keypad. USB ports are provided on the rear panel of the controller allowing you to attach a printer for output of analysis and calibration results, and a keyboard for input of alphanumeric characters. The USB port is also used for installing software updates.

Software

In addition to FoamPyc analyses, the FoamPyc software also allows you to choose **Standard** so that analyses on other types of sample materials can be performed. This is especially useful to a user who has upgraded to the FoamPyc option because it provides the flexibility to perform analyses using the standard method as well as the FoamPyc methods.

The AccuPyc II 1340 Pycnometer's unique run precision feature increases the precision of analysis results by reporting data from five consecutive runs that are within a user-specified tolerance. This feature allows early termination of analyses, thereby decreasing the number of runs needed for accurate results.

*Where P1 is the initial pressure to which the sample is charged, and P2 the final pressure after expansion.

Analysis enables you to measure sample volume, from which density can be derived automatically if you have entered the sample mass. The unit comes preprogrammed with default conditions and ready to perform analyses. It can be easily reprogrammed to meet your specific needs. You can modify your own analyses by entering the number of purges and purge fill pressure, number of cycles and cycle fill pressure, equilibration rate, and run precision. Modifying these parameters enable you to maintain control of the primary portions of the analysis; *purge* and *run*.

A *purge* is used strictly for sample clean-up and for removing air and moisture from the inside of the chamber. It is accomplished by closing off the pycnometer block and filling the cell chamber to the designated purge fill pressure. The chambers are then vented to atmosphere, resulting in elimination of water vapor or other contaminants. A *cycle* is used for collecting the precise, accurate data used in report calculations.

Calibration is used to determine the size of the cell and expansion chambers within the instrument. After calibration, the cell and expansion chamber volumes are stored automatically.

The *zero* function is used to calculate a new zero pressure offset. It is measured when the system is at atmospheric pressure and thermal equilibrium and is subtracted from all subsequent pressure readings in order to obtain a true gauge pressure.

Configurations

To ensure best fit with your sample, the AccuPyc is available in multiple configurations:

All sample chamber volumes are nominal unless otherwise specified.

- 1-cm^3 sample chamber
- 10-cm^3 sample chamber
- 100-cm^3 sample chamber
- 350-cm^3 sample chamber
- 2000-cm^3 sample chamber

Best fit means your sample nearly fills the sample chamber and, therefore, optimizes the precision of your results.

Temperature Control

A temperature-controlled unit to which an external bath is connected is available in the following configurations:

- 10-cm^3 sample chamber
- 100-cm^3 sample chamber

The temperature-controlled unit is specifically designed for temperature-sensitive materials.

This unit is ideally suited for laboratories in which ambient temperature varies during normal work hours, or in which subambient cooling or above-ambient heating is required.

Glove Box

A glove box unit for analysis of samples in which a controlled environment is required is available in the following configurations:

- 1-cm^3 sample chamber
- 10-cm^3 sample chamber
- 100-cm^3 sample chamber
- 350-cm^3 sample chamber
- 2000-cm^3 sample chamber

This unit consists of two separate modules. The controller is placed outside the glove box, while the analysis module is placed inside the glove box. Up to six analysis modules may be placed in the glove box, all controlled by one external control module.

If you have an existing AccuPyc, you can order the glove box analysis unit containing the desired sample chamber and simply connect it to the connector provided on the rear panel of the existing AccuPyc. You would not have to order a controller in this case.

Options

High-Pressure Core Pycnometer

Gas pycnometry is recognized as one of the most reliable techniques for obtaining skeletal volume and density. The AccuPyc High-Pressure pycnometer is a fully automatic pycnometer that provides high-speed, high-precision volume measurements and density determinations on intact or crushed shale core samples.

The high-pressure core pycnometer:

- Operates at a high pressure of 500 psi to provide a better diffusion of the gas into the rock.
- Has a stainless steel sample chamber with a volume of 100 cm^3.
- Has a sample chamber that can accommodate a 48 mm (1.85 in.) diameter core of up to 60 mm (2.40 in.) in length.

Large-Volume Core Pycnometer

The AccuPyc Large-Volume pycnometer sample chamber has been designed to address the specific needs of operations that require pore volume knowledge of intact drilling cores. This instrument eliminates the need to break core samples into smaller pieces prior to being analyzed.

The large-volume core pycnometer:

- Has a large sample chamber with a volume of approximately 2000 cm^3.
- Has a sample chamber can accommodate a 95 mm (3.74 in.) diameter core of up to 278 mm (10.9 in.) in length.

MultiVolume Inserts

A MultiVolume option allowing you to analyze smaller-sized samples with your current AccuPyc model is available for the following configurations:

- 1-cm^3 nominal cell volume, contains a 0.1 cm^3 cup
- 10-cm^3 nominal cell volume, contains 1- and a 3.5-cm^3 cups
- 100-cm^3 nominal cell volume, contains 10- and 35-cm^3 cups
- 2000-cm^3 nominal cell volume, contains 650- and 1300-cm^3 cups

Each kit includes appropriate insert(s), reference standard(s), and sample cup(s) (refer to **ORDERING INFORMATION**, page **6-1**).

Multigas Option

The Multigas Option enables you to connect up to four gases to one analyzer. Installation and operation instructions are provided in **MULTIGAS OPTION**, page **K-1**. Refer to **ORDERING INFORMATION**, page **6-1** for details on placing an order.

Specifications

The AccuPyc 1340 Pycnometer has been tested to meet the specifications in the following table.

Characteristic	Specification
Environment	
Temperature:	Stable between 15 and 35 ºC (59 to 96 ºF) Temperature-controlled AccuPyc: temperature stability is dependent upon specifications of the installed circulator. Recommended range: 15 to 50 ºC (59 to 122 ºF)
Humidity:	20 to 80% relative, non-condensing
Physical	
Height:	17.9 cm (7.0 in.); analysis modules for 1-, 10-, and 100-cm^3 units, and control module 25.9 cm (10.2 in.), 350 cm^3 analysis module 43 cm (17 in.), 2000 cm^3 analysis module
Width:	27.3 cm (10.7 in.), control module 22.2 cm (8.7 in.), analysis module 27 cm (10.6 in.), 2000 cm^3 analysis module
Depth:	36.2 cm (14.3 in.)
Weight:	9.3 kg (20.5 lbs), control/analysis unit (1-, 10-, and 100-cm^3 units) 7.9 kg (17.4 lbs), analysis module (1-, 10-, and 100-cm^3 units) 10.5 kg (23.2 lbs), analysis module (350-cm^3 unit) 3.6 kg (8.0 lbs), control module 26 kg (57.0 lbs), 2000 cm^3 analysis module
Electrical	
Voltage:	90 to 264 VAC
Power:	30 VA
Frequency:	50 to 60 Hz

Characteristic	Specification *(continued)*
Gases	
Research grade helium or nitrogen is recommended. If unavailable, use helium with a dew point of -67 ºC (-88 ºF) or lower. Carbon dioxide, dry air, or argon can also be used for different applications. A multigas option is available for connection of multiple gases.	
Sample Chamber	
1 cm^3 chamber:	1.15 cm ID × 1.1 cm D (0.45 in. ID × 0.44 in. D)
10 cm^3 chamber:	1.8 cm ID × 3.93 cm D (0.72 in. ID × 1.55 in. D)
100 cm^3 chamber:	4.62 cm ID × 6.17 cm D (1.82 in. ID × 0.2.43 in. D)
350 cm^3 chamber:	5.84 cm ID × 13.94 cm D (2.30 in. ID × 5.49 in. D)
2000 cm^3 chamber:	9.7 cm ID × 26 cm D (3.8 in. ID × 10.2 in. D)
Analysis	
Precision:	Reproducibility typically to within ± 0.01% of the nominal full-scale cell chamber volume. Reproducibility guaranteed to within ± 0.02% of the nominal full-scale volume on clean, dry, thermally equilibrated samples using helium in the 15 to 35 ºC range (15 to 50 ºC for temperature-controlled models).
Accuracy:	Accurate to within 0.03% of reading, plus 0.03% of sample capacity
Computer	
Minimum requirements:	Windows® 7 Professional or higher (recommended)

2. INSTALLATION

This chapter describes how to install and verify operation of the AccuPyc II 1340 Pycnometer.

Installing the Software

These steps must be performed for a new purchase of a FoamPyc system or for an upgrade to a FoamPyc system.

Install the FoamPyc software as follows:

1. Place the On/Off switch on the rear panel in the Off (O) position.

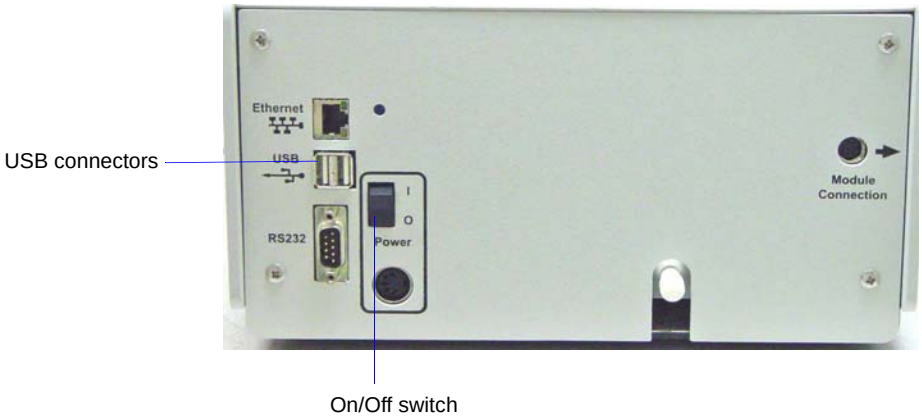

2. Insert the USB media into one of the USB connectors on the rear panel.

3. Place the On/Off switch in the On (|) position.

4. The FoamPyc software starts to load after initialization (approximately 1-2 minutes); the following prompt is displayed:

Updating Application
from USB Media

5. The following prompt displays after the FoamPyc software is loaded:

Update Successful
Remove USB Media

6. Remove the USB media containing the FoamPyc software and store in a secure location.

Installing the Analyzer

These instructions assume that the shipping cartons have been opened and their contents checked and verified as instructed in the Preinstallation Instructions.

Location

When selecting the location of the pycnometer, keep the following in mind:

- The pycnometer performs best in a constant temperature environment.
- It should be installed on a workbench about 36 in. (91.4 cm) high in a location free of drafts from either a forced-air heating or cooling system.
- The pycnometer should not be placed near a window; exposure to sunlight may cause the temperature to vary.

Gas Requirements

The pycnometer uses helium or nitrogen (99.995% pure or better) to provide rapid, accurate analyses. The cylinder containing helium must be fitted with a gas regulator set for 19-23 psig (131-159 kPag). The pressure input to the pycnometer should never be greater than 25 psig (172 kPag). Excessive pressures waste gas due to a protection device contained in the pycnometer that vents the pycnometer to atmospheric pressure if pressure exceeds 35 psig (241 kPag). This protection device is not installed on 2000 cm^3 units.

Minimum recommended gas tank pressure is 200 psig (1379 kPag).

Other inert, dry gases can also be used and may be more applicable for some applications.

Rear Panel Connections

1. Attach an appropriate regulator to the gas supply bottle or gas line, then tighten with a wrench. Leave the gas bottle shut-off valve closed until instructed otherwise.

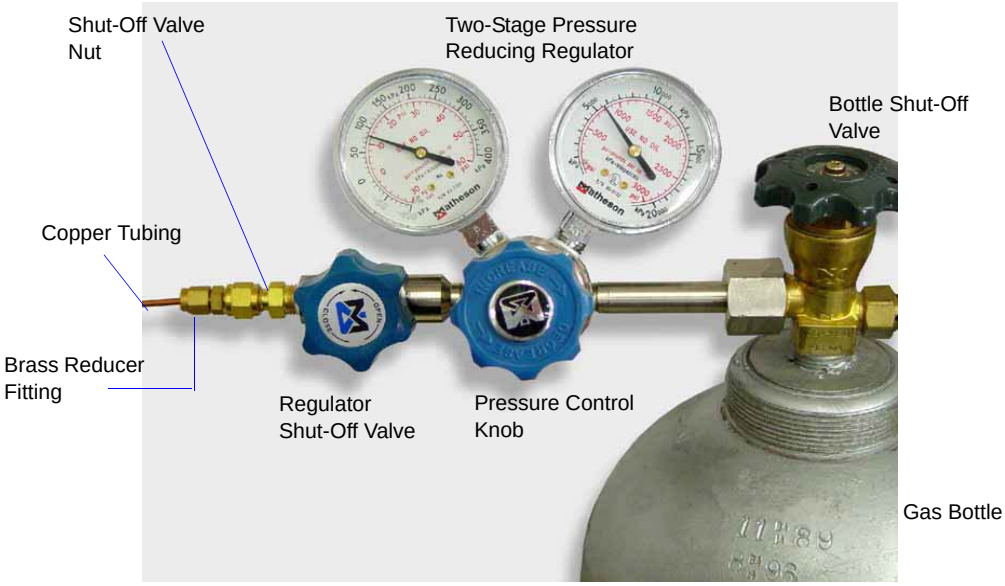

2. Attach the gas inlet line to the regulator, reducer fitting, or regulator expansion:

It is very important to use the inlet tubing supplied with the analyzer. Gas lines made of materials other than copper or stainless steel can cause operational problems as well as inaccurate data.

If regulator has	Then .....
1/4-in outlet	Attach the reducer fitting to the outlet of the regulator shut-off/ isolation valve
	Tighten the nut finger-tight, then 1-1/4 turns with a wrench.
	Continue with the steps given for the 1/8-in outlet
1/8-in outlet	Insert the gas tubing into the fitting.
	Make sure the tubing is seated fully inside the fitting.
	Tighten the nut finger-tight.
	While holding the fitting body steady, tighten the nut with a wrench 3/4 turn.

Do not overtighten the fittings. Doing so can collapse the brass ferrule and cause a leak.

3. Purge the regulator and inlet tubing; this is important to prevent contamination of the analysis gas.

   a. Close the regulator shut-off valve; turn it fully clockwise.

   b. Turn the pressure regulator control knob fully counterclockwise.

   c. Slowly open the gas bottle shut-off valve; turn it counterclockwise, then quickly close it.

   d. Observe the high-pressure gauge.

      If the pressure decreases, tighten the nut connecting the regulator to the gas bottle. If the pressure is stable, proceed to step e.

Make sure the gas supply equipment is adequately vented before performing the next step.

   e. Turn the pressure regulator control knob clockwise until the low-pressure gauge indicates 15 psig (100 kPag).

   f. Open the regulator shut-off valve; turn it counterclockwise.

   g. Open the gas bottle shut-off valve; turn it counterclockwise. Flow gas for 10 to 30 seconds, then close the valve.

   h. Close the regulator shut-off valve; turn it clockwise.

4. Attach the other end of the copper tubing to the gas inlet located on the rear panel of the pycnometer. The pycnometer is shipped with a plug in the inlet; remove and discard the plug, or store in a safe location for future use.

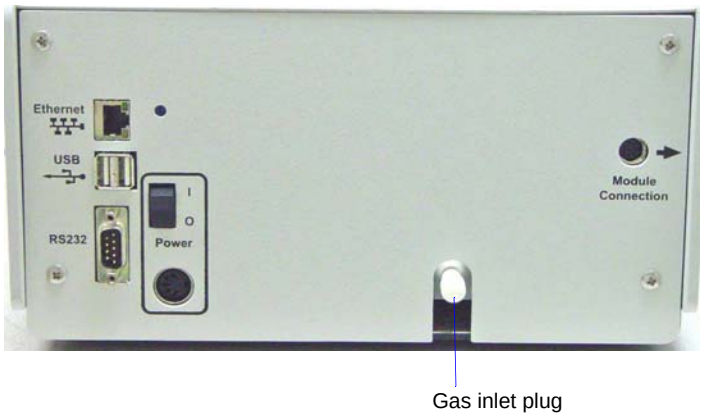

5. Turn the nut on the tubing clockwise until it is finger-tight. Then use a 7/16-in. open-ended wrench (or an adjustable wrench) to tighten the nut an additional 1/4 turn.

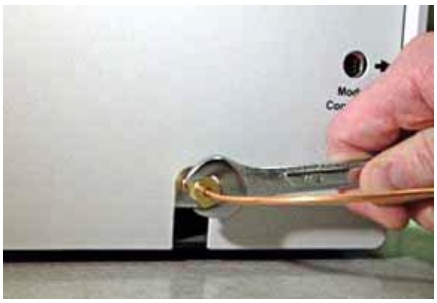

6. Open the shut-off valves for the gas bottle and the regulator.

7. Connect the AC/DC adapter cord to the connector provided on the rear panel of the instrument, then plug the power cord into the adapter.

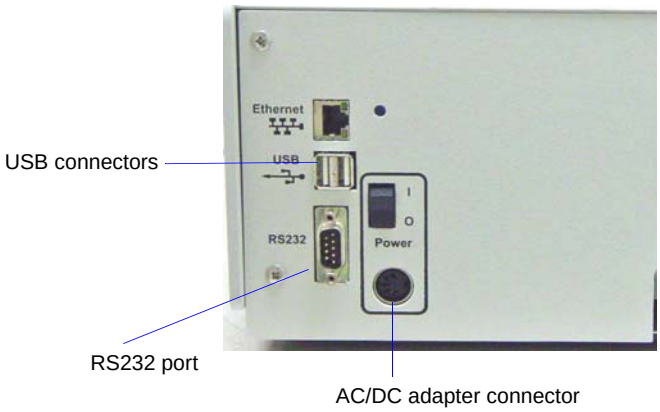

8. If the RS232 port is to be used with a serial line for data transmission or for attaching an analytical balance:

   a. Be sure the pin assignment of the RS232 port matches the pin assignment of the output device for serial line transmission, or for the analytical balance. Refer to **RS-232 PIN ASSIGNMENT**, page **H-1** for pin assignment of the RS232 port.

   b. Check that the serial port settings (baud rate, stop bits, etc.) of the analyzer coincide with those of the attaching device. Refer to **Communications**, page **B-19** for information on viewing and editing current settings.

   c. **If using for serial line transmission**: connect one end of the RS-232 cable to the connector labeled **RS232** on the back of the pycnometer, and the other end to the output device.

      If attaching an analytical balance: attach the cord of the analytical balance to the RS232 port.

9. If connecting a printer:

   a. Connect one end of the printer cable to a USB connector. Connect the other end to the input connector on the printer.

   b. Press **Alt** + **2** to access the set-up function

   c. Press **CHOICE** until **Report Options** displays on the fourth line of the display (refer to **Report Options**, page **B-15** for details on this function), then press **ENTER**.

   d. Press **ENTER** until the **Print Report?** prompt displays; press **CHOICE** to select **Yes**.

   e. Press **ENTER** until the **Printer?** prompt displays; choose the appropriate printer (refer to **SUPPORTED PRINTERS**, page **G-1** for a list of supported printers.

   f. Press **SAVE** to save your selections and return to the **Reload** prompt.

10. If you have a temperature-controlled AccuPyc, attach the circulating bath (refer to **TEMPERATURE-CONTROLLED ACCUPYC**, page **F-1**) before proceeding with the next step.

11. Plug the printer power cord and the pycnometer power cord (which is plugged into the AC/DC power supply) into an appropriate power source.

Turning On and Off the Pycnometer

Place the power ON/OFF switch on the rear panel in the ON (|) position. After a few seconds, the system vents automatically and the green indicator light on the front panel illuminates.

Do not turn off the analyzer while initialization is in progress. Doing so may damage the instrument.

The following prompt is displayed in the keypad window:

```
Unit[n]     SN1234   10 cm3
            X - X - X
Reload
Pressure = (current pressure)
```

Refer to **Pycnometer Display**, page **B-7** for a description of the contents of the pycnometer display.

Allow approximately 30 minutes for the analyzer to warm before performing analyses. For analyses that require very precise results, allow the analyzer to warm a minimum of two hours.

It is recommended that you leave the analyzer on at all times.

It is important that a constant temperature be maintained inside the unit because a change in temperature could alter analysis results. We recommend that the pycnometer remain turned on at all times to maintain thermal stability. Power consumption is small and the cost of electricity is minimal.

If it does become necessary to turn it off, perform the following sequence of steps.

1. Allow any analyses in progress to complete.
2. Place the printer ON/OFF switch in the OFF position.
3. Place the analyzer ON/OFF switch in the OFF position.

Handling System Components

Listed in this section are guidelines for handling system components.

Calibration Standard(s)

These guidelines are for handling the calibration standard(s):

- Wear latex or nitrile, powder-free gloves to prevent transfer of oil from your hands
- Do not drop the standard(s) into the sample cup; allow the standard(s) to roll gently into the cup to prevent denting the cup
- Always return the standard(s) to their case; standard(s) are unit-specific

Sample Chamber Cap

These guidelines are for handling the sample chamber cap:

- Wear latex or nitrile, powder-free gloves to prevent transfer of oil from your hands
- Keep the cap on the sample chamber except when inserting or removing the sample cup. When left uncapped, the sample chamber temperature may become unstable and/or water vapor will adsorb on the inner surface of the chamber. Either of these conditions can affect analysis results.
- Avoid laying the chamber cap on a work surface; debris may collect on the greased surface of the O-ring which can also affect analysis results

When multiple analysis modules are connected, never interchange sample chamber caps; caps are unit-specific

Greasing the Chamber Cap O-Ring

Grease the chamber cap o-ring as described below. Wear rubber gloves to prevent contaminating the grease with oil from your fingertips.

1. Turn the chamber cap counterclockwise and lift it from the chamber.
2. Place the chamber cap on a clean surface, with the O-ring side exposed.
3. Place a small amount of Dow Corning High vacuum grease (or equivalent) on your index finger.

Apply the grease sparingly; too much grease may alter cell volume, while too little grease results in an imperfect seal and leaks.

4. Run your index finger around the O-ring groove.

5. Replace the chamber cap; turn the cap clockwise to close it.

Specifying System Options

The pycnometer is shipped with system defaults as follows:

Option	Choices	Default
Pressure	kPag, psig	psig
Length	cm, inch	cm
Area	cm^2, $inch^2$	cm^2
Volume	cm^3, $inch^3$	cm^3
Language	English, French, German, Italian, Spanish	English
Date/Time	Set for Eastern Standard Time (EST), USA at time of shipment	

To accept these defaults, proceed to **Calibrating the Pycnometer** in the next section.

To change the defaults:

1. Press **ALT + 2** to access the **Setup type** prompt.

```
Unit[n]      SN1234     10 cm3
             X - O - X
Set-up type?
Analysis parameters
```

2. Refer to **Unit Types**, page **B-22** for details on changing these options.

3. Edit the desired options, then press **SAVE** to save all changes and return to the **Reload** prompt.

Calibrating the Pycnometer

Although calibrated before shipment, the pycnometer should be recalibrated to your laboratory atmospheric and environmental conditions. Calibration consists of a two-part procedure:

- Specifying calibration parameters
- Performing the calibration

Specifying Calibration Parameters

Calibration parameters are specified using the Analysis parameters prompts.

Refer to Setup, page B-10 for additional information on responses to the prompts in this procedure.

Refer to the following sections to become familiar with the keypad and display before proceeding:

- **Pycnometer Keypad**, page **B-4**
- **Pycnometer Display**, page **B-7**

1. Press **ALT + 2** to access the Setup prompt.

```
Unit[n]     SN1234     10 cm3

Set-up type?
Analysis Parameters
```

Analysis Parameters should display as the Set-up type; if not, press **CHOICE** until it displays.

2. Press **ENTER** to accept **Analysis Parameters** and advance to the next prompt; accept the default value of **10** for the number of purges.

```
Unit[n]     SN1234     10 cm3
Analysis Parameters
Number of purges:
10
```

3. Press **ENTER**; accept the default of **19.500 psig** for the fill pressure.

```
Unit[n]     SN1234     10 cm3
Analysis Parameters
Purge fill pressure:
19.500 psig
```

4. Press **ENTER**; accept the default of **10** for the number of cycles.

```
Unit[n]     SN1234     10 cm3
Analysis Parameters
Number of Cycles:
10
```

5. Press **ENTER**; accept the default cycle fill pressure of **19.500 psig**.

```
Unit[n]     SN1234     10 cm3
Analysis Parameters
Cycle Fill Pressure:
19.500 psig
```

6. Press **ENTER**; accept the default of **Equilibrate**.

```
Unit[n]     SN1234     10 cm3
Analysis Parameters
P1, P2 end by?
Equilibrate
```

7. Press **ENTER**; accept the default value of **0.005** psig/min.

```
Unit[n]     SN1234     10 cm3
Analysis Parameters
Equilibration Rate:
0.005 psig/min
```

8. Press **ENTER**; accept the default.

```
Unit[n]     SN1234     10 cm3
Analysis Parameters
Use Run Precision?
No
```

9. Press **SAVE** to save the values and return to the **Reload** prompt.

Performing the Calibration

Wear rubber gloves whenever handling cups, standards, or inserts. Oil from your fingers may contaminate the surface and affect results.

1. Turn the Pressure Control knob clockwise to set the regulator pressure at 21.500 psig (low-pressure gauge)..

2. Remove the chamber cap and place an empty cup into the sample chamber; replace the cap.

3. Press **ALT** + **.** (decimal) to access the **Calibrate** function; accept the default (Volume).

```
Unit[n]      SN1234     10 cm3
             X - X - X
Calibration Type?
Volume
```

If Volume is not displayed, press **CHOICE** to display it.

4. Press **ENTER**; enter the volume of the calibration standard (recorded on the outside of the calibration standards case shipped with your instrument).

```
Unit[n]      SN1234     10 cm3
Calibrate Volume
Volume of Cal Std:
[user-entered]
```

The value recorded on the case for a 10-cm^3 pycnometer is the sum of the two standards, and on a 350-cm^3 pycnometer, the sum of the three standards.

5. Press **ENTER**, then **ENTER** again to start the calibration.

6. The first phase of the calibration, **CAL1**, calibrates the volume offset; status messages display until it is finished. The analyzer beeps three times at the end of this phase and displays the following prompt:

```
Unit[n]      SN1234     10 cm3
Calibrate Volume
Insert Cal Std
[ENTER] to start.
```

7. Remove the sample chamber cap, then remove the sample cup from the chamber. Place the cap back onto the chamber while placing the standard(s) into the cup.

8. Tilt the sample cup and allow the standard to roll gently into the cup to prevent denting of the cup.

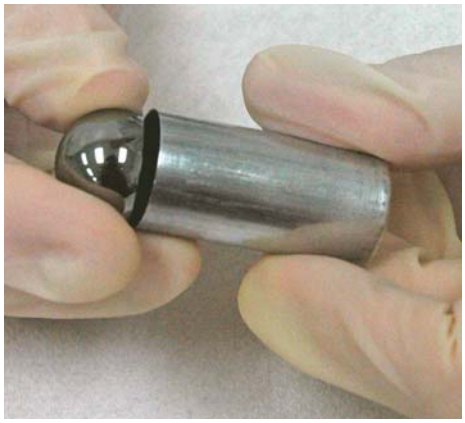

- one standard is shipped with the 1-, 100-, and 2000-cm^3 pycnometers
- two are shipped with the 10-cm^3 pycnometer
- three are shipped with the 350-cm^3 pycnometer

9. Remove the sample chamber cap, place the sample cup back into the chamber, and replace the cap.

10. Allow the standards to reach thermal equilibrium with the pycnometer.

    - 10 minutes for 1- and 10-cm^3 pycnometers
    - 15 minutes for the 100-cm^3 pycnometer
    - 20 minutes for the 350-cm^3 pycnometer
    - 30 minutes for the 2000-cm^3 pycnometer

11. Press **ENTER** to complete the second phase of the calibration, **CAL2**, which calibrates the volume scale.

    After the calibration is complete, the analyzer will automatically return to the **Reload** prompt.

12. Proceed to **Verifying Operation** in the next section before removing the calibration standard(s) from the sample chamber.

Verifying Operation

This section provides instructions for performing an analysis on the calibration standard(s) to verify operation of your AccuPyc. You do not have to edit setup values; the same values used in the calibration will be used in the analysis.

1. Press **Alt + 4**; a prompt similar to the following is displayed:

```
Unit[n]     SN1234   10 cm3
Analyze
[ENTER] to start
[ESCAPE] to cancel
```

2. Press **ENTER** to begin the analysis. When the analysis has finished, you will automatically be returned to the **Reload** prompt.

3. Press **CHOICE** to view the average volume and standard deviation.

```
Unit[n]     SN1234   10 cm3
            X - X - X
Avg Vol = (volume)
Std Dev = (deviation)
```

4. Compare the value displayed for the average volume to the value recorded on the top of your calibration kit. These two values should agree plus or minus the variance obtained using the following calculation:

   Variance = (chamber volume * 0.0003) + (Value recorded on Standards case * 0.0003)

   Example: calculate the variance for a **10-cm**^{3} pycnometer with a value of **6.372242** recorded on the case as follows:

   Variance = (10 * 0.0003) + (6.372242 * 0.0003) = 0.003 + 0.0019116726 = **0.005**

   If the values do not agree, a leak is indicated. Refer to **Checking the Cell and Expansion Chambers for Leaks**, page **5-7** and test the system for leaks. Then repeat steps 1 through 3. If the values continue to disagree, contact your service representative.

5. Remove the standard(s) and place them back into the case.

It is recommended that you read **USER INTERFACE**, page **B-1** before performing analyses. This will familiarize you with the hardware and software of the AccuPyc.

Installing Software Upgrades

1. Place the On/Off switch on the rear panel in the Off (O) position.

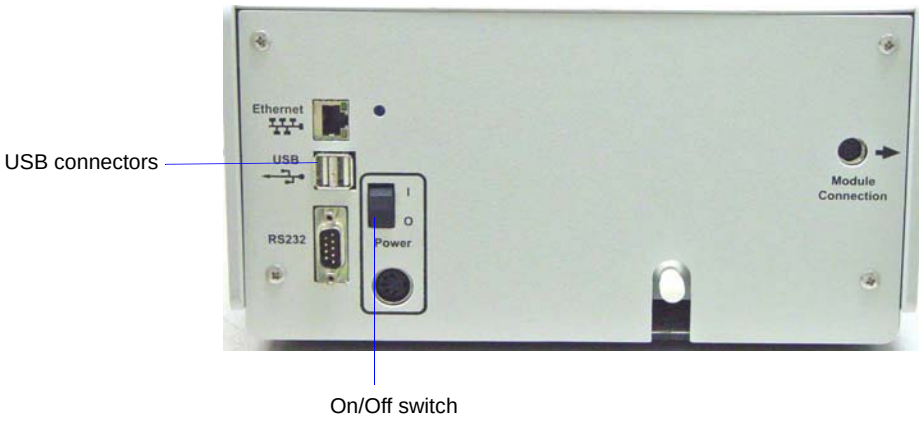

2. Insert the USB media containing the software update into one of the USB connectors on the rear panel.

3. Place the On/Off switch in the On (|) position.

4. The software starts to load after initialization (approximately 1-2 minutes); the following prompt is displayed:

Updating Application
from USB Media

5. The following prompt displays after the software update is loaded:

Update Successful
Remove USB Media

6. Remove the USB media and store in a secure location.

B. USER INTERFACE

This chapter contains information on how to:

- operate the analyzer keypad
- use system commands

This chapter contains information to familiarize you with the hardware and software of the AccuPyc. It is recommended that you read this chapter before attempting to operate the pycnometer.

Controls, Indicators, and Connectors

Front Panel

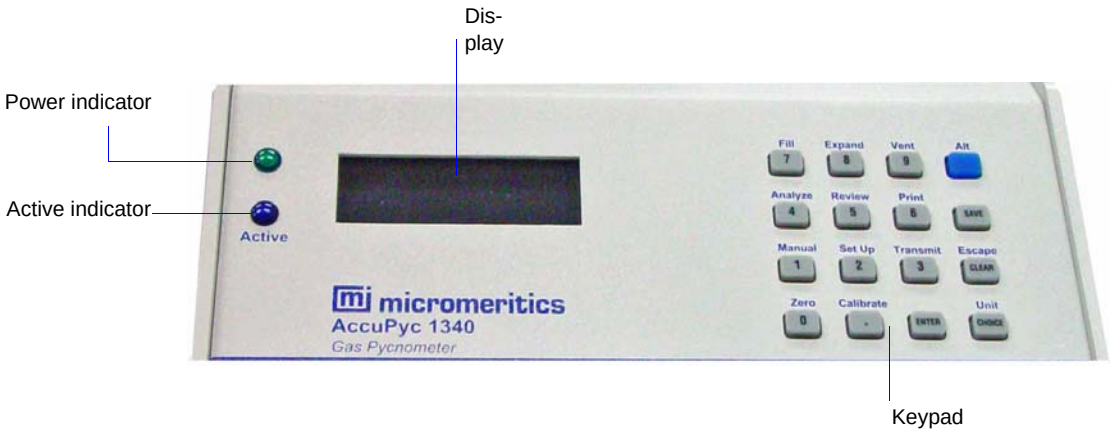

Power indicator This is a green LED and illuminates when the analyzer is turned on.

Active indicator This is a blue LED and illuminates when an operation is in progress.

Blinks when waiting for the operator to start an automatic operation, or when being operated manually.

Display window The display window contains information about the analyzer and the current operation. Refer to **Pycnometer Display**, page **B-7** for a description of the information in the display.

Keypad

Enables you to enter commands for the analyzer. Refer to **Pycnometer Keypad**, page **B-4** for a description of the keypad.

Rear Panel

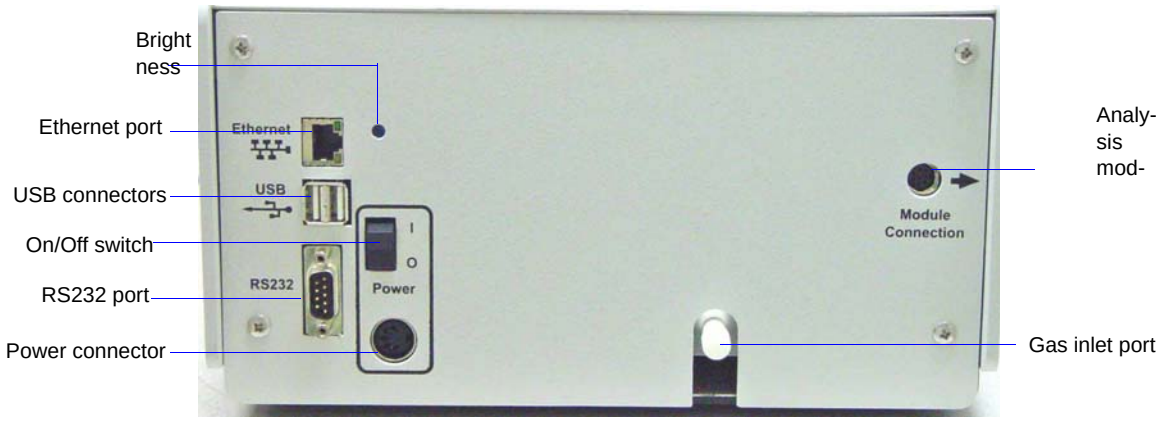

Brightness control

Enables you to adjust the brightness of the display.

Insert a small-blade screwdriver into the opening. Rotate the screwdriver until you feel it engage in the slot, then turn clockwise to darken and counterclockwise to lighten.

Ethernet port

This port can be used to connect to a network enabling you to be notified via e-mail of analysis completion, and to monitor analysis results using a web browser. A straight-through or cross-over ethernet cable can be used since the analyzer will adapt to either type

USB connectors

For attaching external devices, such as a printer, bar code reader, or keyboard. This connector is also used to install software upgrades.

On/Off switch

For turning the analyzer on and off

RS232 port

Enables you to use a serial line for data transmission.

This port can also be used to attach an analytical balance for automatic transmission of the sample mass.

Refer to **RS-232 PIN ASSIGNMENT**, page **H-1** for the pin assignment of this connector.

Power connector

For connecting the AC/DC adapter cord, which provides power to the pycnometer. The power cord is then plugged into the adapter.

Analysis module connector

For connecting an additional analysis module; you can attach up to five additional analysis modules to the initial control/analysis module. Each analysis module is equipped with Analysis module input and output connectors.

Gas inlet port

For connecting the analysis gas; helium is recommended. If you have multiple analysis modules attached, each module contains a gas inlet port. Multiple gases can be attached using the Multigas option (refer to **ORDERING INFORMATION**, page **6-1**).

Dust Filter

(For 2000-cm^3 units only.) Traps sample dust to protect internal valves.

Top Panel

The top panel contains the sample chamber in which the sample container is placed for analysis, or the standard(s) for calibration.

The sample chamber should remain capped except when inserting or removing a sample. If left uncapped, water vapor will adsorb on the inner surface of the chamber and the temperature becomes unstable; either condition can affect analysis results. If water vapor accumulates in the chamber, the pycnometer must be purged to remove it.

The stand-alone control module, often used for the glove-box pycnometer, does not contain a sample chamber.

Pycnometer Keypad

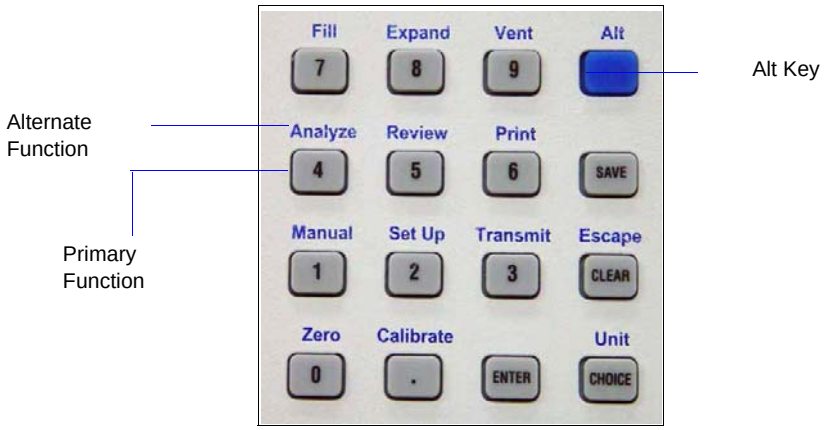

Most keys on the keypad perform one primary and one alternate function. The primary function of any key is indicated by the number or command on the face of the key. The alternate function is indicated by the command above the key. When you press **Alt** to enter the alternate function mode, a **+** (plus) sign is shown in the upper right corner of the display.

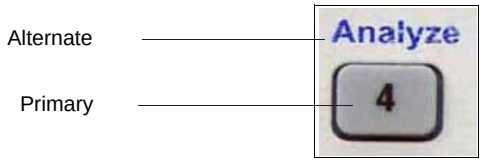

To select the:

- **alternate function**, press **Alt** plus the key. *For example*; press **Alt + 4** to start an analysis.
- **primary function**, press only the key. *For example*; press **4** to enter the number 4.

If you press the **Alt** key accidentally, press it a second time to cancel its function.

- The alternate functions for keys **5 (BYPASS), 7** (**FILL**), **8** (**EXPAND**), and **9** (**VENT**) are executed differently. You must first press **Alt + 1** to enter Manual mode to access these commands. After you enter Manual mode, you simply press the desired key to use the alternate function. For example: press **Alt + 1 + 7** to manually control the Fill valve. You must press **Alt + CLEAR** to exit Manual mode.

Tables 3-1 and 3-2 describe how the keys are used to control and monitor the pycnometer.

Table 3-1. Standard Keys

Key	Used To
0 through **9**	Enter the numbers 0 through 9
. (decimal)	Enter a decimal point, a dash for sample or instrument ID, a slash for date, or a colon for time
ENTER	Complete an entry or begin an action
CHOICE	Display the next message when at the **Reload** prompt.
	Display the next multiple choice item when in a command mode.
CLEAR	Clear a message when at the **Reload** prompt
	Clear an entry when in a command mode.
SAVE	Save the information you entered and return to the **Reload** prompt.
Alt key	The **Alt** key changes the keypad mode. The keypad may be used in either primary function mode or alternate function mode. When you press the **Alt** key to enter alternate function mode, a plus sign (+) appears in the upper right corner of the display and the commands written above the keys become available. When you complete the operation accessed using the **Alt** key, you automatically exit the alternate mode and return to the **Reload** prompt. If the **Alt** key is pressed in error, press **Alt** again to exit the alternate mode and return to the **Reload** prompt.

Table 3-2. Key Combinations for Alternate Functions

Function	Key(s)	Use To
Zero	**Alt** + **0**	Zero the pressure transducer.
Calibrate	**Alt** + **.** (decimal)	Calibrate the pycnometer.
Manual	**Alt** + **1**	Enables manual mode, allowing you to open and close the **FILL** (Key 7), **EXPAND** (Key 8), and **VENT** (Key 9) valves. The state of the valve is shown on the second line of the display, where X = closed and O = open. Press **Alt + CLEAR** to exit manual mode and return to the **Reload** prompt.
Bypass	**5**	Open or close the **Bypass** valve; the first character on the second line represents the Bypass valve. You must be in manual mode for this function.
Fill	**7**	Open or close the **Fill** valve; the first character on the second line represents the Fill valve. You must be in manual mode for this function.
Expand	**8**	Open or close the **Expansion** valve. The second character on the second line represents the Expansion valve. You must be in manual mode for this function.
Vent	**9**	Open and close the **Vent** valve; the third character on the second line represents the Vent valve. You must be in manual mode for this function.
Set Up	**Alt** + **2**	Display or edit analysis parameters, report options, calibration data, data transmission parameters, unit types, operating language, and date and time.
Transmit	**Alt** + **3**	Transmit analysis or calibration data over the serial line. Transmit a partial report if an automatic operation is in progress.
Escape	**Alt** + **CLEAR**	Discard all data entered in the current mode and return to display mode. Cancel an automatic operation if in progress. Exit manual mode.
Analyze	**Alt** + **4**	Perform an analysis.

Function	Key(s)	Use To *(continued)*
Review	**Alt** + **5**	Review completed analysis or calibration data.
Print	**Alt** + **6**	Print an analysis or calibration report. If an automatic operation is in progress, print a partial report.
Unit	**Alt** + **CHOICE** + **[unit number]**	Select the unit you plan to use for the current operation. This command is used when multiple analysis units are attached. For example; if you have five units attached and you plan to use unit three for the next analysis, press **Alt + CHOICE + 3**; any command you use will apply to unit three. You can also use the **UNIT** command to view the progress of an analysis when multiple units are attached. For example; you have analyses in progress on units one, two, and three. Press **Alt + CHOICE + 2** to view the status of the analysis on unit two.

Pycnometer Display

The display consists of four lines; it provides information about the analyzer and the current operation. This is an example of the display when the analyzer is in an idle state, referred to in this documentation as the **Reload** prompt. During operations, different types of information are shown in lines two, three, and four. Line one always contains the same information.

```
Unit[n]        SN1234        10 cm3
                X - X - X
Reload
P = (current pressure)
```

First line

Displays the unit number, serial number, and nominal cell volume of the selected unit. You can have up to five analysis modules attached; all six will be controlled by the initial module containing the controls (keypad and display).

Second line

At the **Reload** prompt (shown above), manual control, or an automatic operation, this line contains three characters, separated with dashes. The first character represents the **Fill** valve, the second represents the **Expand** valve, and the third represents the **Vent** valve. Valve states are as follows:

X = closed
O = open

During user interface, this line shows the command you are currently using. For example; it displays **Analysis Parameters** when you are entering analysis parameters.

Third line

Displays status of the current operation, or **Reload** when in an idle state. When the **Reload** prompt is displayed, this line may also contain an asterisk (*), indicating there is a message (or messages) in the queue. Refer to **ERROR MESSAGES**, page **A-1** for information on viewing and clearing these messages, and for a list of the error messages that may be seen.

During certain functions (such as Setup), this line contains a prompt for additional information.

Fourth line

At the **Reload** prompt, shows the current pressure and temperature alternately, where:

P = pressure
T = temperature

This line is also used to choose options, enter information, or provide information about the current operation.

System Commands

The display of the pycnometer remains at the **Reload** prompt until you initiate a command by pressing the appropriate key(s) on the keypad. Commands start an analysis or other automatic operations and allow you to modify operating parameters. The following commands are available:

- Setup, enables you to specify system options and operating parameters, page **B-10**
- **Analyze**, enables you to perform an analysis, page **B-24**
- **Calibrate**, enables you to calibrate the pycnometer's volume, temperature, or pressure,

page **B-30**

- **Review**, enables you to review the results of the last operation (analysis or calibration), page **B-34**
- **Print**, enables you to print reports, page **B-37**
- **Manual**, enables you to open and close valves manually, page **B-40**
- **Transmit**, enables you to transmit data through a serial communications line, page **B-40**
- **Zero**, enables you to zero the volume or pressure transducer, page **B-41**

You cannot initiate a command (other than Print or Transmit) while an automatic operation is in progress.

When you access a command, most functions display prompts. A prompt is a request for you to enter information or choose an option, and typically is contained on the third and fourth lines of the display. The third line contains a description of the requested information and the fourth line displays a default value (when applicable). To use the default value, just press **ENTER**. For example, when you press **Alt + 2**, the following prompt is displayed:

```
Unit[n]     SN1234     10 cm3
            X - X - X
Setup Type?
Analysis Parameters
```

To select **Analysis Parameters**, which is the default option, press **ENTER**.

To use an option other than the default, the keypad can be used to enter or choose other responses. There are two types of prompts:

- **Data entry** prompts are followed by a colon (:). Use the keypad to enter the desired value, then press **ENTER**. If you enter an value that is out of range, you will hear a beep and a message showing the range is displayed; enter a value in the range displayed.

- **Multiple choice** prompts contain a fixed set of responses and are followed by a question mark (?). To select a multiple-choice response, press **CHOICE** until the desired response is displayed, then press **ENTER**.

At any time while entering information you may:

- Press **SAVE** to save the information you entered and return to the **Reload** prompt.
- Press **Alt + CLEAR** to discard the information you entered and return to the **Reload** prompt.

Setup

Press **Alt** + **2** to access the set-up function.

```
Unit[n]     SN1234     10 cm3

Set-up type?
Analysis Parameters
```

Set up enables you to choose or enter parameters to be used for analysis, calibration, reporting, and data transmission.

Choices: *Analysis Parameters, Report Options, Calibration Data, Communications, Unit Types*

Press **CHOICE** to display the desired set-up type, then press **ENTER**.

The parameters you enter or choose for each set-up type are stored and used to control the pycnometer until new ones are specified. Each Setup is explained in subsequent sections.

At the completion of each set-up, you are returned to the **Set-up type?** prompt. Choose one of the following options:

- Press **SAVE** to save the information you entered and return to the **Reload** prompt.
- Choose another set-up type; do not press **SAVE** unless parameters have been entered. This will return the **Reload** prompt.
- Press **Alt** + **CLEAR** to discard the entered information and return to the **Reload** prompt.

Analysis (and Calibration) Parameters

This option enables you to specify analysis and calibration parameters. Although the **Set-up Type** is shown as Analysis Parameters, you use these same prompts to specify Calibration Parameters. The

pycnometer is shipped with default values; however, they may be modified to meet laboratory requirements.

```
Unit[n]     SN1234     10 cm3

Set-up Type?
Analysis Parameters
```

Press **ENTER** to display the next prompt.

```
Unit[n]     SN1234     10 cm3
Analysis Parameters
Analysis Method?
A
```

Choose the type of analysis to be used.

Choices: A, B, C, D, E, Standard

Standard: Use this method to perform an analysis on non-foam sample materials such as powders. If you are updating to the FoamPyc option, this is the method you choose to use the AccuPyc in the mode you updated from

A: This method measures the closed cell fraction and corrects for the cells damaged while cutting the sample to the necessary size and shape. This is accomplished by using either the average cell diameter or the cell chord length (as defined in ASTM method D-3576[a]) and the measurements of the sample to determine the volume of the cut cells. This volume is deducted from the total volume of the open cells measured by the pycnometer.

B: This method corrects for the cut cells by using two separate measurements. For the 2nd measurement, the sample is recut to double the amount of cut surface. The observed difference in cut open cell volume is applied as a correction to the initial measured volume. This method offers the distinct advantage that no assumptions are needed about the relative amounts of open and closed cells.

C: This method does not correct for cut cells. It is used for materials with predominantly open cells where good accuracy can be achieved without correction. The accuracy level deteriorates as the percentage of closed cells increases.

a. A copy of this test method may be obtained from ASTM, 100 Barr Harbor Drive, West Conshohocken, PA 19428-2959; Phone (610) 832-9585; FAX (610)832-9255

D: This method is a compressibility test. The fill pressure is increased incrementally over the sample with each repeat of the P1, P2[a] cycle. The apparent variation of the measured sample volume with the average pressure is determined. This test is an approximate indication. It is not intended to be an exact measure of the volume compressibility**.**

E: This method is a cell fracture test; a perfectly rigid foam is assumed. First a P1, P2* cycle is performed at the lower of two specified P1 pressures, and the results stored. A second cycle is performed at a higher specified value of P1, then a third cycle identical to the first cycle is performed. The difference between the volume of the sample on the first measurement and on the third measurement is reported as the volume of fractured cells. It is assumed that cells fracture by exposure to the highest pressure (2nd cycle) so that when the third measurement is made, the measured sample volume has decreased from the first cycle by the amount of the closed cell volume which was fractured.

The next five prompts display when you choose Method A, B, C, D, or E.

```
Unit[n]     SN1234     10 cm3
Analysis Parameters
Resin Density:
1.560 g/cm3
```

Does not display for Standard method

Enables you to enter the density of the solid material (resin) used to make the foam. If the density is unknown, refer to a materials handbook.

Range: *0.0001 to 99.9999 g/cm^3*

```
Unit[n]     SN1234     10 cm3
Analysis Parameters
Compute Volume?
Compute
```

Does not display for Standard method

Enables you to enter the manner in which the geometric volume is determined.

Choices: *Compute, User-Computed*

Compute: specific information is requested at the start of the analysis

User-Computed: you are prompted to enter a value for the geometric volume at the start of the analysis and, if **Method A** is selected, the active area (the total geometric surface area of your sample, excluding any sides that contain a skin).

a. Where P1 is the initial pressure to which the sample is charged, and P2 the final pressure after expansion.

```
Unit[n]     SN1234     10 cm3
Analysis Parameters
Shape Type?
Cube
```

Enables you to choose the shape of your sample, or you can select to choose the shape when you start the analysis.

Choices: *Cube, Cylinder, Rectangular solid, Set at run time*

Does not display for Standard method

If you specify a shape (rather than to set at run time), prompts pertinent to that shape display when you start the analysis.

```
Unit[n]     SN1234     10 cm3
Analysis Parameters
Measure Cell By?
Chord length
```

Applicable only when using Method A.

Choices: *Chord Length, Cell Diameter*

Does not display for Standard method

```
Unit[n]     SN1234     10 cm3
Analysis Parameters
Number of Purges:
10
```

Enter the number of purges to be performed and press **ENTER**.

Range: *0 to 999*

Purging cleans the cell and expansion chambers before an analysis begins. The greater the number of purges, the cleaner the sample will be when analyzed.

FoamPyc analyses only require three purges.

```
Unit[n]     SN1234     10 cm3
Analysis Parameters
Purge Fill Pressure:
19.500 psig
```

Enter the fill pressure and press **ENTER**.

Range: *0 to 19.850 psig*
0 to 136.86 kPag

For FoamPyc analyses, the typical pressure is 3.5 psig.

For analyses on standard samples, the measured volume is more precise if a greater fill pressure is used. The default of 19.500 is appropriate for most standard analyses.

Some materials, such as organic polymers, may require a lower pressure in order to limit permeability into the sample matrix.

```
Unit[n]     SN1234     10 cm3
Analysis Parameters
Number of cycles:
10
```

Enter the number of cycles to be performed and press **ENTER**. A cycle is a series of functions which equals to a single volume measurement.

Range: *1 to 999*

FoamPyc analyses typically only require three cycles.

```
Unit[n]     SN1234     10 cm3
Analysis Parameters
Cycle Fill Pressure:
19.500 psig
```

Enter the fill pressure and press **ENTER**.

Range: *0 to 19.850 psig*
0 to 136.86 kPag

```
Unit[n]     SN1234     10 cm3
Analysis Parameters
P1, P2 end by?
Equilibrate
```

Enables you to choose the manner in which to end the pressure measurement.

Choices: *Equilibrate, Fixed interval*

Press **CHOICE** to make your selection, then press **ENTER**.

```
Unit[n]     SN1234     10 cm3
Analysis Parameters
Equilibration Rate:
0.0050 psig/min
```

Does not display for Fixed Interval

Displays when you select **Equilibrate** at the **P1, P2 end by?** prompt; pressure measurement will end when the entered rate is obtained. Enter the equilibration rate and press **ENTER**.

Range: *0.0001 to 9.0000 psig/min*
0.0007 to 62.05 kPag/min

A high rate will produce faster results, but results may not be as precise as desired. The lowest rates may cause errors when some materials (such as those with appreciable vapor pressures, closed cell foams, or organics) are analyzed.

```
Unit[n]     SN1234     10 cm3
Analysis Parameters
Interval Time:
60 s
```

Does not display for Equilibrate

Displays when you select **Fixed interval** at the **P1, P2 end by?** prompt; pressure measurement ends when the specified time is reached. Enter the interval time and press **ENTER**.

Range: *10 to 99999 s (seconds)*

```
Unit[n]      SN1234     10 cm3
Analysis Parameters
Use Run Precision?
No
```

The run precision feature enables early termination of the analysis when certain criteria are met.

Choices: *Yes, No*

When you select **Yes**, the analysis terminates after five consecutive runs are within the specified tolerance. Always request a large number (50 to 99) of runs. If you select a small number of runs, the analysis stops when the number you entered is reached even though the specified tolerance has not been met.

Select **Yes** or **No**, then press **ENTER**.

```
Unit[n]      SN1234     10 cm3
Analysis Parameters
Percent Full-Scale:
0.05%
```

This prompt displays when you selected **Yes** for run precision and if you have requested more than five cycles.

Enter the run precision volume tolerance which is expressed as a percent of nominal cell volume (sample capacity), then press **ENTER**.

Range: *0.01% to 50%*

Report Options

The Report options command enables you to specify the report mode (density or volume for analysis) and the report destination.

`Unit[n]  SN1234  10 cm3`
`Set-up Type?`
`Report Options`
	Press **CHOICE** until **Report Options** is displayed, then press **ENTER**.

Unit[n] SN1234 10 cm3 **Report Options** **Anls Display Mode?** **Volume**	Press **CHOICE** to select **Density** or **Volume**, the mode in which the analysis report will be displayed on the pycnometer. If you select **Density**, a **Sample Mass?** prompt displays during the Analysis function so that you can enter a value for the sample mass. For accurate data, the sample mass must be entered when choosing **Density**. Press **ENTER**.
Unit[n] SN1234 10 cm3 **Report Options** **Request Sample ID?** **No**	A sample ID (identification) is a unique identifier of the sample. Using sample IDs can help you keep track of data from multiple analyses. For example, you can use the sample ID as a date and time stamp. A **Sample ID** prompt displays during the analysis operation, allowing you to enter the identification when you select **Yes** for this prompt. *Choices: Yes, No* Press **CHOICE** to select **Yes** or **No**, then press **ENTER**.
Unit[n] SN1234 10 cm3 **Report Options** **Request description?** **No**	The description prompt enables you to enter additional descriptive information. This prompt typically is used only when a keyboard is attached. Press **CHOICE** to select **Yes** or **No**, then press **ENTER**.
Unit[n] SN1234 10 cm3 **Report Options** **Print Report?** **No**	This prompt enables you to have a report generated automatically after an analysis or calibration. *Choices: Yes, No* Press **CHOICE** to select **Yes** or **No**, then press **ENTER**.
Unit[n] SN1234 10 cm3 **Report Options** **Transmit Report?** **No**	This prompt enables you to transmit analysis or calibration data automatically after the operation. *Choices: Yes, No* Press **CHOICE** to select **Yes** or **No**, then press **ENTER**.

Unit[n] SN1234 10 cm3 **Report Options** **E-mail Report?** **No**	This prompt enables you to e-mail analysis or calibration results automatically at the conclusion of the operation. *Choices: Yes, No* Press **CHOICE** to select **Yes** or **No**, then press **ENTER**.
Unit[n] SN1234 10 cm3 **Report Options** **Printer?** **Epson ESCP2**	This prompt allows the selection of a printer for report generation. This is a system option and does not have to be specified for each analysis (or calibration). It also applies for all units when multiple analysis modules are attached. *Choices: Canon Bubble Jet, Epson ESCP, Epson ESCP2, Epson ESCP Raster, HP PCL 3, HP PCL 6XL, PostScript* Refer to **SUPPORTED PRINTERS**, page **G-1** for a list of supported printers. Press **CHOICE** to select the appropriate printer, then press **ENTER**.
Unit[n] SN1234 10 cm3 **Report Options** **Transmission Format?** **Single column**	Select the format of data to be used when transmitting reports. Refer to **TRANSMITTED DATA**, page **D-1** for the format used when transmitting data. *Choices: Single column, Spreadsheet* Press **ENTER**.

Unit[n] SN1234 10 cm3 **Report Options** **Request insert?** **No**	Enables you to be prompted for an insert during analysis or calibration operations. *Choices: Yes or No* An insert is a device you can insert into your sample chamber, allowing you to use a smaller sample cup for analysis of smaller sample quantities. Inserts are available for the 1.0-, 10-, and 100-cm^3 pycnometers. Refer to **ORDERING INFORMATION**, page **6-1** for information on placing an order. If you are not using inserts, ensure that **No** is selected, then press **ENTER**.

Calibration Data

The sample cell volume and the expansion cell volume are used for calculating the sample volume. The cell volume and expansion volume are updated automatically when the pycnometer is calibrated. These prompts enable you to view current calibration data.

Unit[n] SN1234 10 cm3 **Set-up Type?** **Calibration Data**	Press **CHOICE** until **Calibration Data** is displayed, then press **ENTER**.
Unit[n] SN1234 10 cm3 **Calibration Data** **Chamber Insert?** **None**	Displays when you select **Yes** at the **Request insert** prompt in Report Options. *Choices: None, 0.1 cm^3 (for 1 cm^3 pycnometer)* *None, 3.5 cm^3, 1 cm^3 (for 10 cm^3 pycnometer)* *None, 35 cm^3, 10 cm^3 (for 100 cm^3 pycnometer)* Press **CHOICE** until the appropriate insert is displayed, then press **ENTER**.
Unit[n] SN1234 10 cm3 **Calibration Data** **Cell Volume:** **(value from calibration)**	Displays the cell volume determined during calibration. *Range: 0.01 to 999.0000 cm^3* Press **ENTER**.

Unit[n] SN1234 10 cm3 **Calibration Data** **Expansion Volume:** **(value from calibration)**	Displays the expansion volume determined during calibration. *Range: 0.5 to 999.0000 cm^3* Press **ENTER**.

Communications

Communications enables you to specify communications criteria, such as baud rate, parity, etc.

Unit[n] SN1234 10 cm3 **Set-up Type?** **Communications**	Press **CHOICE** until **Communications** is displayed, then press **ENTER**.
Unit[n] SN1234 10 cm3 **Communications** **IP Address?** **DHCP**	This prompt enables you to choose the manner in which your IP address is assigned. With an IP address, you can access a web browser to view analysis results. Typically, once an analysis (or calibration) is started, you cannot review results from the previous operation. However, results from five analyses are stored in the controller. A web browser enables you to view them. (Refer to **Using a Web Browser**, page **4-14** for step-by-step instructions.) An IP address must exist for this operation. You can have an IP address detected automatically, or you can specify one. *Choices: DHCP, Specify* Be sure your ethernet cable is plugged into the Ethernet port on the rear panel of the analyzer and to the network before proceeding with this option. Choose **DHCP** to have an IP address assigned automatically, or **Specify** to specify an address. Press **CHOICE** until the desired option is displayed, then press **ENTER**.

Unit[n] SN1234 10 cm3 **Communications** **Requesting Address** **[ENTER} to continue** *Does not display for Specify*	Displays when you choose **DHCP** for the first time. Press **ENTER**; the system automatically tries to assign an IP address. If the system is able to determine an address, the following prompt containing the assigned address is displayed. **Unit[n] SN1234 10 cm3** **Communications** **Assigned Address:** **(assigned address)**
Unit[n] SN1234 10 cm3 **Communications** **Requesting Address** **[ENTER} to continue**	If an address cannot be determined, this prompt is displayed. **Unit[n] SN1234 10 cm3** **Communications** **Requesting Address** **[ESC} to cancel.** Press **Alt + CLEAR** to cancel the operation and return to the **Reload** prompt. Contact your IT Department, or choose the **Specify** option and enter the appropriate information.
Unit[n] SN1234 10 cm3 **Communications** **IP Address:** **(user-entered)** *Does not display for DHCP*	Displays when you choose **Specify**, enabling you to enter an appropriate IP address. This is a numerical field in the following format: nnn.nnn.nnn.nnn Enter the address and press **ENTER**.
Unit[n] SN1234 10 cm3 **Communications** **Subnet Mask:** **(user-entered)** *Does not display for DHCP*	Displays this prompt so that you can enter the subnet mask number. This field is also numerical in the same format as the IP address. Enter the subnet mask number and press **ENTER**.

Unit[n] SN1234 10 cm3 **Communications** **Gateway:** **(user-entered)** *Does not display for DHCP*	The Gateway address is used for communicating outside of your local network. This address is often the same as the instrument's IP address with a "1" after the last dot instead of the last three characters. For example, nnn.nnn.nnn.1. Contact your IT Department is you have questions. Enter the gateway address and press **ENTER**.
Unit[n] SN1234 10 cm3 **Communications** **E-mail Address:**	When connected to a network via the ethernet connection on the rear panel of the analyzer, you can have analysis (or calibration) results e-mailed automatically at their completion. This prompt enables you to enter the e-mail address to which results are to be sent. If you are not using DHCP and the e-mail address is outside the local network, be sure to specify a gateway address (see previous prompt). To use this option, you should have a keyboard connected to one of the USB connectors. Enter the e-mail address and press **ENTER**.
Unit[n] SN1234 10 cm3 **Communications** **E-mail Server:**	This prompt enables you to enter the numerical address of the SMTP server (the computer that is going to deliver the results). If this address is unknown, contact your IT Department. Your IT Department may need to configure the server to accept e-mail from the AccuPyc. For proper configuration, the following information may be required: • IP address for the AccuPyc • Sender line: **Micromeritics-1340** Press **ENTER**.

Unit[n] SN1234 10 cm3 **Communications** **Baud Rate?** **9600**	Baud rate specifies the rate at which data are transmitted via the RS232 port. *Choices: 9600 600 110 1200 150 4800 300 19200* Select the desired baud rate, then press **ENTER**.
Unit[n] SN1234 10 cm3 **Communications** **Data Bits?** **8**	Press **CHOICE** to select **8** or **7**, then press **ENTER**.
Unit[n] SN1234 10 cm3 **Communications** **Stop Bits?** **1**	Press **CHOICE** to select **1** or **2**, then press **ENTER**.
Unit[n] SN1234 10 cm3 **Communications** **Parity?** **None**	Press **CHOICE** until the desired option is displayed, then press **ENTER**. *Choices: None, Even, Odd*
Unit[n] SN1234 10 cm3 **Communications** **Xon / Xoff Protocol?** **Disabled**	This prompt enables you to use the Xon/Xoff protocol for transmitting data. Press **CHOICE** to select **Disabled** or **Enabled**, then press **ENTER**.

Unit Types

These prompts enable you to specify the:

- units of measurement
- operating language

- current date and time

Unit[n] SN1234 10 cm3 **Set-up Type?** **Unit Types**	Press **CHOICE** until **Unit Types** is displayed, then press **ENTER**.
Unit[n] SN1234 10 cm3 **Unit Types** **Pressure units?** **psig**	This prompt enables you to choose the manner in which pressure is displayed. Choices: *psig (pounds per square inch gauge)* *kPag (kilopascals gauge)* Press **CHOICE** to select the desired unit, then press **ENTER**.
Unit[n] SN1234 10 cm3 **Unit Types** **Sample size unit?** **cm**	This prompt enables you to choose the manner in which sample size is displayed. Choices: *cm (centimeter))* *in. (inch)* Press **CHOICE** to select the desired unit, then press **ENTER**.
Unit[n] SN1234 10 cm3 **Unit Types** **Language?** **English**	This prompt enables you to choose the operating language. *Choices: English, Deutsch, Español, Francais, Italiano* Once you select a language, the change is effective immediately; you do not have to press **SAVE**. For example; if you choose **Italiano**, the next prompt will display in Italian. However, any error messages that may be in the message queue will remain in English (or the current selected language); they will not be translated. Error messages that occur after you select the language will display in that language. Choose the desired language, then press **ENTER.**

Unit[n] SN1234 10 cm3 **Unit Types** **Date (DD/MM/YY)?** **(pre-set date)**	The date is included in all printed and transmitted reports, and is set before shipment. However, the date shown in the display may be incorrect for the area to which the instrument is shipped. The date is entered in a two-digit format for the day, month, and year. For example; to set the date for September 1, 2006, enter **01/09/06** (day/month/year). Use the **.** (decimal) key to enter a slash (/). Press **ENTER** to advance to the next prompt.
Unit[n] SN1234 10 cm3 **Unit Types** **Time (HH:MM:SS)?** **(pre-set time)**	The time (in 24-hour format) at which an analysis begins and ends is shown on all printed and transmitted reports. The time shown on the display may be inappropriate for your time zone and, therefore, may require changing. The time is entered in a two-digit format for the hour, minutes, and seconds. For example; to set the time to 1:05 pm, enter **13:05:00** (hour:minutes:seconds). Use the **.** (decimal) key to enter a colon (**:**). Press **ENTER** to advance to the next prompt.

Analyze

This command enables you to perform an analysis; press **Alt** + **4** on the keypad.

At any time during the following sequence of prompts, you can:

- Press **SAVE** to store the parameters you entered and return to the **Reload** prompt; no analysis is started. This also deletes any previously stored sample data. Verify that all desired reports from the previous sample have been viewed before pressing **SAVE.**
- Press **Alt** + **CLEAR** to discard the information you entered and return to the **Reload** prompt.

The prompts that display during the **Analyze** function are dependent upon the choices you make in the **Setup** > **Report Options** function explained on page **B-15**.

```
Unit[n]     SN1234   10 cm3
Analyze
Sample ID:
(user-entered)
```

Enables you to enter a sample identification for the current analysis.

You can enter up to 20 numbers and dashes; press **.** (decimal) to insert a dash. If you have a keyboard connected, you can enter up to 20 alphanumeric characters.

Enter the sample ID and press **ENTER**.

```
Unit[n]     SN1234   10 cm3
Analyze
Description Line 1
(user-entered)
```

Enables you to enter a description for the current sample.

You can use up to 20 alphanumeric characters for each line. These prompts are used when a keyboard is attached to the pycnometer.

Enter the description and press **ENTER**; a prompt for Line 2 of the Description is displayed. Enter the description and press **ENTER.**

```
Unit[n]     SN1234   10 cm3
Analyze
Sample Mass:
0.0000
```

This prompt displays for all methods of FoamPyc analyses or when you select **Density** for Analysis display mode (**Anls display mode** prompt) using the standard method.

Enter a value for the sample mass, then press **ENTER**.

Range: *0.0000 to 10000.0000 g*

This field will also accept input from an analytical balance. The analytical balance must be connected to the RS232 port. While this prompt is displayed, press the appropriate button on your analytical balance to transfer the mass; most balances use the **Enter** button (refer to the manufacturer's manual for the appropriate command).

```
Unit[n]     SN1234   10 cm3
Analyze
Chamber insert?
None
```

Enables you to choose the insert you are using.

Choices: *None, 0.1 cm^3 (for 1 cm^3 unit)*
None, 3.5 cm^3, 1 cm^3 (for 10 cm^3 unit)
None, 35 cm^3, 10 cm^3 (for 100 cm^3 unit)

Press **CHOICE** until the appropriate insert is displayed or **None** if an insert is not being used, then press **ENTER**.

If **Compute** is specified in **Analysis Parameters** set-up, the following prompts display:

```
Unit[n]     SN1234    10 cm3
Analyze
Shape Type?
Cubd
```

Displays when **Set at run time** is selected in the Set-up function.

Choices: *Cube, Cylinder, Rectangular solid*

These prompts display when you select **Cube** as the shape:

```
Unit[n]     SN1234    10 cm3
Analyze
Edge Length:
2.5400 cm
```

Range: *0.0001 to 9.9999 cm*
0.0001 to 3.9370 in.

```
Unit[n]     SN1234    10 cm3
Analyze
Number of pieces:
1
```

Range: *1 to 99*

```
Unit[n]     SN1234    10 cm3
Analyze
Number of skins:
1
```

Displays for Method A only. The number you enter here is the number of sides on the sample which contain a “skin.” A skin is a thin film of plastic which seals the surface of the sample.

Range: *0 to 6*

These prompts display when you select **Cylinder** as the shape:

```
Unit[n]     SN1234    10 cm3
Analyze
Cylinder Diameter:
2.5400
```

Range: *0.0001 to 9.9999 cm*
0.0001 to 3.9370 in.

```
Unit[n]     SN1234    10 cm3
Analyze
Cylinder Height:
2.5400 cm
```

Range: *0.0001 to 9.9999 cm*
0.0001 to 3.9370 in.

```
Unit[n]     SN1234    10 cm3
Analyze
Number of pieces:
```

Range: *1 to 99*

```
Unit[n]     SN1234    10 cm3
Analyze
Number of skins:
1
```

Displays for **Method A** only. The number you enter here is the number of sides on the sample which contain a “skin.” A skin is a thin film of plastic which seals the surface of the sample.

Range: *0 to 2*

These prompts display when you select **Rectangular solid** as the shape:

```
Unit[n]     SN1234    10 cm3
Analyze
Longest Edge:
2.5400 cm
```

Range: *0.0001 to 9.9999 cm*
0.0001 to 3.9370 in.

```
Unit[n]     SN1234    10 cm3
Analyze
Shortest Edge:
2.5400 cm
```

Range: *0.0001 to 9.9999 cm*
0.0001 to 3.9370 in.

```
Unit[n]     SN1234    10 cm3
Analyze
Remaining Edge:
2.5400 cm
```

Range: *0.0001 to 9.9999 cm*
0.0001 to 3.9370 in.

```
Unit[n]     SN1234    10 cm3
Analyze
Number of pieces:
1
```

Range: *1 to 99*

```
Unit[n]     SN1234    10 cm3
Analyze
Number Large Skins:
1
```

Displays for **Method A** only.

Range: *0 to 2*

```
Unit[n]     SN1234    10 cm3
Analyze
Number Small Skins:
1
```

Displays for **Method A** only.

Range: *0 to 2*

```
Unit[n]     SN1234    10 cm3
Analyze
Remaining Skins:
1
```

Displays for **Method A** only.

Range: *0 to 2*

If **User-Computed** is specified in **Analysis Parameters** set-up, the following prompts display:

```
Unit[n]     SN1234    10 cm3
Analyze
Geometric Volume:
50.0000 cm3
```

Range: *0.0001 to 100.0000 cm^3*

```
Unit[n]     SN1234    10 cm3
Analyze
Active Area:
10.0000 cm2
```

Displays for **Method A** only.

Range: *0.0001 to 999.9999 cm^2*
0.0001 to 196.85 $in.^2$

If **Method A** is chosen, one of the following prompts is displayed, depending on the choice you made for the **Measure Cell By** prompt in **Analysis** set-up:

```
Unit[n]     SN1234    10 cm3
Analyze
Chord Length:
0.1000 cm
```

Range: *0.0001 to 99.9999 cm*
0.0001 to 39.37 in.

```
Unit[n]     SN1234    10 cm3
Analyze
Cell Diameter:
0.100 cm
```

Range: *0.0001 to 99.9999 cm*
0.0001 to 39.37 in.

If **Method D** is chosen, the following prompts are displayed:

```
Unit[n]     SN1234    10 cm3
Analyze
Initial Pressure:
2.000 psig
```

Range: *0.001 to 19.8500 psig*
0 to 136.86 kPag

```
Unit[n]     SN1234    10 cm3
Analyze
Pressure Increment:
10.000 psig
```

Range: *0.001 to 19.8500 psig*
0 to 136.86 kPag

```
Unit[n]     SN1234    10 cm3
Analyze
Final Pressure:
15.000 psig
```

Range: *From initial pressure to 19.8500 psig*
0 to 136.86 kPag

If **Method E** is chosen, the following prompts are displayed:

```
Unit[n]     SN1234    10 cm3
Analyze
Low Pressure:
2.000 psig
```

Range: *0.001 to 19.8500 psig*
0 to 136.86 kPag

```
Unit[n]     SN1234    10 cm3
Analyze
Fracture Pressure:
10.000 psig
```

Range: *From low pressure to 19.8500 psig*
0 to 136.86 kPag

The analysis is now ready to begin with this prompt:

```
Unit[n]     SN1234    10 cm3
Analyze
[ENTER] to start
[ESCAPE] to cancel
```

Choose one of the following:

- Press **ENTER** to start the analysis; the analysis begins and operational status messages are continually displayed during analysis.
- Press **Alt + CLEAR** to cancel the analysis.
- Press **SAVE** to store the data you entered and return to display mode.

If **Method B** is chosen, a beep sounds at the completion of the analysis and the following prompt is displayed:

```
Unit[n]     SN1234    10 cm3
Analyze
Cut sample, then
[ENTER] or [ESCAPE]
```

Perform these steps:

1. Remove the sample chamber cap, then remove the sample cup (with sample) from the chamber. Replace the cap while performing the next step.
2. Cut the sample, place it back into the cup.
3. Remove the cap, place the cup back into the sample chamber; then replace the cap.
4. Press **ENTER** to begin the second analysis.

Calibrate

This command enables you to perform a full volume slope and offset calibration; enter a temperature or pressure value obtained from an external reference device; copy to or load from a USB stick; and reset the pressure calibration.

Press **ALT** + **.** (decimal) to access the **Calibrate** function.

```
Unit[n]     SN1234     10 cm3
            X - X - X
Calibration Type?
Volume
```

Choices: *Volume, Temperature, Pressure, Copy to USB Stick, Load from USB Stick, Reset Pressure Calibration*

Press **CHOICE** until the desired option is displayed:

Press **ENTER**.

Volume

Before proceeding, place an empty cup into the sample chamber for **Cal1** (volume offset). If using an insert, place the insert and its appropriate sample cup into the sample chamber. See **Installing and Removing Inserts and Sample Cups**, page **J-2**.

```
Unit[n]     SN1234     10 cm3
            X - X - X
Calibration Type?
Volume
```

Press **ENTER** to accept **Volume** (default) and display the next prompt.

```
Unit[n]     SN1234     10 cm3
Calibrate Volume
Chamber insert?
None
```

Press **CHOICE** until the appropriate insert is displayed, then press **ENTER**.

Choices: *None, 0.1 cm^3 (for 1 cm^3 pycnometer)*
None, 3.5 cm^3, 1.0 cm^3 (for 10 cm^3 pycnometer)
None, 35 cm^3, 10 cm^3 (for 100 cm^3 pycnometer)

Yes must be selected for the **Request Insert** prompt in Report Options for this prompt to display.

```
Unit[n]     SN1234     10 cm3
Calibrate Volume
Volume of Cal Std:
1.0000 cm3
```

Enter the volume of the calibration standard(s) you plan to use in the calibration (located on the outside of the calibration standards case).

Range: *0.1 to 999.0000 cm^3*

Some pycnometers require and are shipped with multiple standards; in this instance, the value recorded on the case is the sum for all standards and is the one you should enter at this prompt. Press **ENTER**.

```
Unit[n]     SN1234     10 cm3
Calibrate Volume
[ENTER] to start
[Escape] to cancel
```

Press **ENTER** to begin the calibration or **Alt + CLEAR** to cancel the calibration.

The volume offset is calibrated first (**Cal1**). When the first calibration is complete, the pycnometer beeps three times and the next prompt is displayed.

```
Unit[n]     SN1234     10 cm3
            X - X - X
Insert Cal Std
[ENTER] to start
```

Place the calibration standard(s) in the cup in the sample cell chamber and replace the chamber cap; then press **ENTER** to calibrate the temperature offset (**Cal2**).

Calibration continues and operational status messages are continually displayed. After the operation is complete, the pycnometer returns to the **Reload** prompt.

For best results, sample volume should be approximately equal to the volume of the calibration standard. Therefore, if calibrating the 10-cm^3 pycnometer for use with smaller sample volumes, only one standard can be chosen. If using one standard, enter half of the value at the **Volume of cal std** prompt (shown on the previous page).

Press **Alt + CLEAR** to cancel the operation.

Temperature

This operation typically is performed by a Micromeritics service representative.

```
Unit[n]     SN1234     10 cm3
Calibrate Temperature
Temperature:
(user-entered)
```

Enter the temperature obtained from a reference temperature sensor.

Press **ENTER**; you automatically return to the **Reload** prompt.

Press **ALT + CLEAR** to cancel the operation.

Pressure

This calibration requires a specially designed chamber cap equipped with a pressure gauge and can only be performed by Micromeritics service personnel.

```
Unit[n]     SN1234     10 cm3
Calibrate Pressure
Pressure:
(user-entered)
```

Enter the pressure value obtained from the external pressure device, then press **ENTER**; you automatically return to the **Reload** prompt.

Press **Alt + CLEAR** to cancel the operation.

Copy to USB Stick

Enables you to write a file containing the calibration information for the current unit to a USB stick.

```
Unit[n]     SN1234     10 cm3
            X - X - X
Calibration Type?
Copy to USB stick
```

Press **CHOICE** until the desired option is displayed:

Press **ENTER**.

```
Unit[n]     SN1234     10 cm3
            X - X - X
Insert USB stick
and press [ENTER]
```

Insert the USB device into the USB connector on the rear panel of the unit.

Wait a few seconds, then press **ENTER**.

```
Unit[n]     SN1234    10 cm3
            X - X - X
Calibration for
SN (nnnn) copied
```

These prompts appear in succession.

```
Unit[n]     SN1234    10 cm3
            X - X - X
Remove USB stick
```

Remove the USB stick; the system automatically returns to the **Reload** prompt.

Load from USB Stick

Loads calibration information to the current unit.

```
Unit[n]     SN1234    10 cm3
            X - X - X
Calibration Type?
Load from USB stick
```

Press **CHOICE** until the desired option is displayed:

Press **ENTER**.

```
Unit[n]     SN1234    10 cm3
            X - X - X
Insert USB stick
and press [ENTER]
```

Insert the USB device into the USB connector on the rear panel of the unit.

Press **ENTER**.

```
Unit[n]     SN1234    10 cm3
            X - X - X
Load cal. for SN:
```

Enter the serial number, then press **ENTER**.

```
Unit[n]     SN1234    10 cm3
            X - X - X
Calibration for
SN (nnnn) loaded
```

These prompts appear in succession.

```
Unit[n]     SN1234    10 cm3
            X - X - X
Remove USB stick
```

Remove the USB stick; the system automatically returns to the **Reload** prompt.

Reset Pressure Calibration

This option can be used when you suspect the pressure is not being reported correctly by the analyzer. For example: a zero, negative, or unreasonable high reading is being consistently reported. Resetting to nominal may restore normal pressure readings but a proper calibration should be performed.

```
Unit[n]     SN1234     10 cm3
            X - X - X
Calibration Type?
Reset Pressure Cal.
```

Press **CHOICE** until the desired option is displayed:

Press **ENTER**.

```
Unit[n]     SN1234     10 cm3
            X - X - X
Reset Pressure Cal.?
No
```

This resets the pressure calibration to nominal values; temperature and volume calibrations are not affected. Nominal values may be sufficient for your application. However, you should schedule a proper pressure calibration as soon as possible. Press **CHOICE**.

Choices: *Yes*, *No*

Select **Yes** to reset the calibration to nominal values. Contact your service representative and schedule a proper pressure calibration since data accuracy may be compromised.

Select **No** to contact your service representative to schedule a proper pressure calibration.

Press **ENTER**.

Review

The Review function enables you to review results of the last operation (analysis or calibration).

Analysis

Press **Alt + 5** to review or edit analysis results; the following prompts display if requested. You may edit the information in the prompts if desired; for example, you may wish to edit the sample mass when density determinations are requested.

Unit[n] SN1234 10 cm3 X - X - X Sample ID: (sample identification)	Displays the identification entered for the analysis. Press **ENTER**.

Unit[n] SN1234 10 cm3 X - X - X Sample Mass: (mass)	Displays the sample mass you entered for the analysis (if Method **A**, **B**, **C**, **D**, **E**, or **Density** was chosen). Press **ENTER**.
Unit[n] SN1234 10 cm3 X - X - X Geometric volume:	Displays if the analysis was performed using Method **A**, **B**, **C**, **D**, or **E**. Press **ENTER**.
Unit[n] SN1234 10 cm3 X - X - X Temperature: (sample chamber temperature)	Displays the sample chamber temperature. Press **ENTER**.
Unit[n] SN1234 10 cm3 X - X - X Start: (HH:MM:SS) (DD/MM/YY)	Displays the time and date the analysis began. Press **ENTER**.
Unit[n] SN1234 10 cm3 X - X - X End: (HH:MM:SS) (DD/MM/YY)	Displays the time and date the analysis completed. Press **ENTER**.
Unit[n] SN1234 10 cm3 X - X - X Open Cell %:	Displays if the analysis was performed using Method **A**, **B**, **C**, **D**, or **E**. Press **ENTER**.
Unit[n] SN1234 10 cm3 X - X - X Dn [n] = (density) Dv [n] = (deviation)	Displays when you choose **Density** for a standard analysis. **[n]** shown in the prompts to the left represent the cycle number.

Unit[n] SN1234 10 cm3 **X - X - X** **V [n] = (volume)** **Dv [n] = (deviation**	Displays when you choose **Volume** for a standard analysis, or for Method **A**, **B**, **C**, **D**, and **E**. Press **CHOICE** to exclude the displayed density (or volume) from the calculated average. This will place an asterisk next to it indicating that it will not be included. Press **CHOICE** again to remove the asterisk and have it included. Each time you press **CHOICE** to exclude (or include) the value, a new deviation is calculated and displayed. Press **ENTER** to view the values for the next cycle. Press **SAVE** when you wish to return to the Reload prompt. When you press **SAVE**, all collected data are recalculated automatically, and all data reduction messages are added back into the queue.

Calibration

Press **Alt + 5** to review or edit calibration results; the following prompts display if they were selected for the calibration. You may edit the information in the prompts if desired

Unit[n] SN1234 10 cm3 **X - X - X** **Chamber insert?** **(insert)**	Displays the insert you selected for the calibration or None. If the selection is incorrect, press **CHOICE** until the appropriate one is shown, then press **ENTER**. *Choices: None, 0.1 cm^3 (for 1 cm^3 pycnometer)* *None, 3.5 cm^3, 1 cm^3 (for 10 cm^3 pycnometer)* *None, 35 cm^3, 10 cm^3 (for 100 cm^3 pycnometer)*
Unit[n] SN1234 10 cm3 **X - X - X** **Volume of Cal Std:** **(volume)**	Displays the volume of the calibration standard that was used for the calibration. Press **ENTER**.
Unit[n] SN1234 10 cm3 **X - X - X** **Which Chamber?** **(chamber type)**	Enables you to choose the chamber for which to view volume; press **CHOICE** to choose the chamber. *Choices: Cell volume, Expansion volume* Press **ENTER**.

Unit[n] SN1234 10 cm3 X - X - X Start: (HH:MM:SS) (DD/MM/YY)	Displays the time and date the calibration began. Press **ENTER**.
Unit[n] SN1234 10 cm3 X - X - X End: (HH:MM:SS) (DD/MM/YY)	Displays the time and date the calibration completed. Press **ENTER**.
Unit[n] SN1234 10 cm3 X - X - X Cell [n] = (volume) Dev [n] = (deviation) or Unit[n] SN1234 10 cm3 X - X - X Exp [n] = (volume) Dev [n] = (deviation	Displays the cell or expansion volume (depending on the selection you made at the **Which Chamber** prompt), and the deviation from the mean. **[n]** shown in the prompts to the left represent the run number. Press **CHOICE** to exclude the displayed density (or volume) from the calculated average. This will place an asterisk next to it indicating that it will not be included. Press **CHOICE** again to remove the asterisk and have the value again included in the average. Each time you press **CHOICE** to exclude (or include) the value, a new deviation is calculated and displayed. Press **ENTER** to view the values for the next cycle. Press **SAVE** when you wish to return to the Reload prompt. Press **SAVE** and all collected data are recalculated automatically, and all data reduction messages are added back into the queue.

Print

Press **Alt** + **6** to print a report of the last operation; analysis or calibration. If you press **Alt** + **6** during an automatic operation, a partial report is printed.

Reports are generated after analysis and calibration, and remain available for viewing or printing until another automatic operation (other than zero pressure) is performed. When you perform an automatic operation, reports from the previous operation are deleted.

Data for up to five analyses, however, are stored in the control module for each analysis module attached. These data can be viewed using a web browser when connected to a network via an ethernet connection. Refer to **Communications**, page **B-19** for additional information on this feature.

A printed report contains more information than the report generated to the display, and is easier to read. It also provides a hard copy of data results. An asterisk next to a cycle number indicates that it has not been included in calculations.

The following examples show reports for a calibration on a standard and an analysis performed on the same standard.

Calibration Report

Shown below is an example of a Calibration report.

Page 1

AccuPyc 1340 V1.00
Serial Number: 101
Calibration Report

Started: 08/12/06 10:09:08 Completed: 08/12/06 10:35:06
Temperature: 22.3 °C
Volume of Calibration Standard: 51.099987 cm3
Number of Purges: 10 Equilibration Rate: 0.0050 psig/min

Cycle#	Cell Volume cm3	Deviation cm3	Expansion Volume cm3	Deviation cm3
1	108.3451	-0.0005	74.7356	-0.0004
2	108.3392	-0.0065	74.7315	-0.0045
3	108.3463	0.0007	74.7364	0.0005
4	108.3525	0.0068	74.7406	0.0047
5	108.3533	0.0076	74.7412	0.0053
6	108.3459	0.0002	74.7361	0.0002
7	108.3498	0.0042	74.7388	0.0029
8	108.3350	-0.0107	74.7286	-0.0074
9	108.3429	-0.0027	74.7341	-0.0019
10	108.3465	0.0008	74.7365	0.0006

Average Offset: -0.0188 cm3 Standard Deviation: 0.0089 cm3
Average Scale Factor: 1.0001 Standard Deviation: 0.0000
Average Cell Volume: 108.3456 cm3 Standard Deviation: 0.0053 cm3
Average Expansion Volume: 74.7360 cm3 Standard Deviation: 0.0037 cm3

Analysis Report

This example shows a report for an analysis on the same standard as the calibration report.

Page 1

AccuPyc 1340 V1.00
Serial Number: 101
Zero Cell Volume Report

Started: 08/12/06 09:31:12
Temperature: 22.2 °C
Number of Purges: 10

Completed: 08/12/06 10:06:56
Equilibration Rate: 0.0050 psig/min

Cycle#	Cell Volume cm3	Deviation cm3
1	108.3156	-0.0156
2	108.3334	0.0022
3	108.3375	0.0063
4	108.3266	-0.0046
5	108.3381	0.0069
6	108.3379	0.0067
7	108.3477	0.0165
8	108.3222	-0.0090
9	108.3262	-0.0050
10	108.3268	-0.0044

Average Offset: -0.0188 cm3
Average Cell Volume: 108.3312 cm3

Standard Deviation: 0.0089 cm3
Standard Deviation: 0.0089 cm3

Manual

Press **Alt** + **1** to enter manual mode. This option enables you to manually control the **Fill**, **Expansion**, and **Vent** valves.

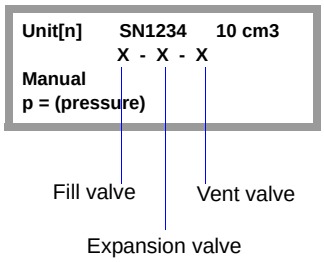

When **Manual** is shown in the display, you can manually open and close the Fill, Expansion, and Vent valves by pressing the appropriate keys.

7 - Opens and closes the Fill valve
8 - Opens and closes the Expansion valve
9 - Opens and closes the Vent valve

The three characters in the second line of the display show the state of the valves, where:

First character = Fill valve
Second character = Expansion valve
Third character = Vent valve

X = Closed
O = Open

Press **SAVE** to exit manual mode and return to display mode.

Prolonged opening of all three valves at one time may cause excessive loss of helium.

Transmit

Press **Alt** + **3** to transmit report data over a serial line. If you attempt to transmit data during an automatic operation, a partial report is transmitted.

The AccuPyc RS-232 interface transmits report data to a computer using the standard ASCII file format. Once captured with a serial communications program such as HyperTerminal (included in most Windows installations), the report data can be imported into popular spreadsheet and data manipulation programs.

Press **Alt** + **3** to cancel report data sent to the serial line.

Reports may be transmitted in a single-column format or a spreadsheet format. Refer to **TRANSMITTED DATA**, page **D-1** for a description of the formats.

Zero

This command enables you to zero the pressure transducer or the volume offset.

The pressure transducer zeroes automatically before each cycle in an analysis or calibration; therefore, it is not necessary for you to zero for these operations. Typically, this function is not required unless you manually perform analyses for an extended period of time.

Press **Alt + 0** to access the Zero function.

```
Unit[n]     SN1234    10 cm3
            X - X - X
Zero Type?
Pressure
```

Enables you to zero the pressure transducer or the volume offset.

Choices: *Pressure, Volume*

If you choose **Volume**, be sure the sample chamber is empty.

Press **CHOICE** until the desired option is displayed, then press **ENTER**.

If you choose **Pressure**, the next prompt is not displayed.

```
Unit[n]     SN1234    10 cm3
Zero Volume
Chamber insert?
None
```

Does not display for Pressure

Displays when you choose **Volume** only if you selected **Yes** at the **Request insert** prompt in Report Options.

Choices: *None, 0.1 cm^3 (for 1 cm^3 pycnometer)*
None, 3.5 cm^3, 1 cm^3 (for 10 cm^3 pycnometer)
None, 35 cm^3, 10 cm^3 (for 100 cm^3 pycnometer)

Press **CHOICE** until the appropriate insert is displayed, then press **ENTER**.

```
Unit[n]     SN1234    10 cm3
Zero Volume
[Enter] to start
[Escape] to cancel
```

or

```
Unit[n]     SN1234    10 cm3
Zero Pressure
[Enter] to start
[Escape] to cancel
```

Press **ENTER** to begin the zero operation or **Alt + CLEAR** to cancel the operation.

If you are zeroing the **Volume**, the purges and cycles specified in the current analysis parameters are used to calculate the volume offset.

After the operation is complete, the pycnometer returns to the **Reload** prompt.

4. GENERAL OPERATING INSTRUCTIONS

This chapter contains step-by-step procedures for common operations for the AccuPyc.

Preparing for Analysis

Setting Regulator Pressure

The Purge fill pressure and Cycle fill pressure are specified using **Setup** > **Analysis Parameters** (explained on page **B-13**). Set the regulator pressure at the higher of the two (plus 2.0 psig). For example; if you have specified the Purge fill pressure as **19.500** psig and the Cycle fill pressure as **19.000** psig, you should set your regulator pressure at **21.500** psig.

1. Be sure the tank pressure for the gas regulator is at least 200 psig. Pressures less than 200 psig indicate the tank is low on. Analyses are terminated automatically if gas is depleted.

2. Press **Alt + 1** to enter manual mode.

3. Press **8** (EXPAND) and **9** (VENT) to open the expansion and vent valves; the second line of the display should look like this: **X - O - O**

4. Press **7** (FILL) to open the fill valve; the second line of the display should look like this: **O - O - O**

5. Adjust the regulator pressure control knob until the desired pressure is shown on the regulator display.

6. Press **7** to close the fill valve, then increase the pressure by 2.0 psig; the second line of the display should look like this: **X - O - O**.

7. Allow the pressure in the pycnometer to drop below 2.0 psig, then press **8** and **9** to close the Expansion and Vent valves; the display should look like this: **X - X - X**

8. Press **SAVE** to return to the **Reload** prompt.

Entering Analysis and Report Parameters

Enter appropriate analysis and report parameters for the current analysis. Refer to **Setup**, page **B-10** and follow the instructions given for the prompts. The parameters you specify or choose in Setup determine what prompts and information are displayed for the analysis.

If you plan to have data results e-mailed automatically after analysis, be sure to specify e-mail parameters:

- Request E-mail report, refer to page **B-17**
- Specify E-mail address and server, refer to page **B-21**

Preparing and Loading a Sample

FoamPyc Methods

FoamPyc Methods are intended to conform to the procedures detailed in ASTM Test Methods D-6226 and D-3576. Prepare your sample according to the appropriate method outlined in these procedures. After you have prepared your sample and placed it into the sample chamber, proceed to **Starting an Analysis**, page **4-4**.

Standard Method

It is important to properly prepare your sample to obtain accurate results. Samples must be free of moisture in order to obtain true sample mass and to avoid the distorting effect of water vapor on the volume measurement. The following procedures are recommended; however, modifications may be necessary for some materials.

- Heat-sensitive materials may have to be dried by long-time exposure to silica gel, freeze drying, etc.

- Materials having a low melting point may be dried using the purge process. In this case, do not weigh the sample and cup until after the purge and analysis have been completed.

The important thing to remember is to avoid exposure of the dried sample to atmospheric moisture during each step of the preparation process. This means weighing as rapidly as possible and installing in the instrument without unnecessary delay.

Keep the cap on the cell chamber except when actually inserting or removing a sample. If the chamber remains uncapped, water vapor will adsorb on the inner surface of the chamber and temperature instability will occur; either condition can affect analysis results.

1. Weigh the empty sample cup. (If volume only is to be measured, you may skip this step).

2. Place a quantity of sample in the cup. Use as large a quantity of sample as possible; we recommend that the cup be at least two-thirds full. Pack powders and fluffy materials (if permissible) to obtain maximum sample weight in the cup. (Refer to **ORDERING INFORMATION**, page **6-1** to order specially designed cups for powders and fluffy materials.)

3. Place the sample cup (with sample) in a drying oven. The amount of time the sample must be heated depends on the material and the temperature it will tolerate; this may have to be established by other tests.

4. Remove the sample cup from the oven and transfer it to a desiccator provided with active desiccant. Allow it to cool until near room temperature. In the steps which follow, minimize air exposure of the sample.

5. Weigh the cup and sample and record the weight. Subtract the empty sample cup weight from the sample cup plus sample weight to determine the sample weight. (If volume only is to be measured, you may skip this step.)

6. Remove the cell chamber cap, place the sample cup (with sample) into the cell chamber, then replace the cap.

   It is best not to lay the cap down while loading the sample. Immediately replace the cap when the sample is loaded. This will prevent particles from accumulating on the greased surface (refer to **Handling System Components**, page **2-8** for guidelines on handling system components).

7. If you have a temperature-controlled AccuPyc, perform the following steps before proceeding with **Starting an Analysis** in the next section.

   a. Turn on the bath circulator and specify the temperature you wish to use for your analysis. (Refer to the manufacturer's manual for instructions on operating the bath circulator.)

   b. Allow the temperature to stabilize to the set temperature. Observe the temperature reading on the fourth line of the display.

Starting an Analysis

Before you start your analysis, be sure you have:

- specified analysis and report parameters, refer to pages **B-10** and **B-15**
- prepared and loaded your sample, page **4-2**

The prompts that display for an analysis depend on the options you choose in **Setup** > **Analysis Parameters** and **Report Options**; therefore, your analysis may not display all of the prompts referred to in these procedures.

Standard Method

This section provides steps for performing an analysis using the **Standard** method.

1. Press **Alt + 4**; the **Sample ID** prompt is shown; enter an appropriate identification. You can enter up to 20 numbers and dashes; press **.** (decimal) to insert a dash.

2. Press **ENTER**; the **Description** prompt is displayed. You can enter up to 20 numbers and dashes on each line; press **.** (decimal) to insert a dash.

   Most users display this prompt only if they have a computer keyboard attached to the pycnometer.

3. Press **ENTER**; the **Sample mass** prompt is displayed if you have chosen **Density** at the **Anls display mode** prompt in **Setup** > **Report Options**. Enter the mass (weight) of your sample.

   If you have an analytical balance connected to the RS232 port, press the appropriate button on the balance to transfer the sample mass while this prompt is displayed.

4. Press **ENTER**; the **Chamber insert** prompt is displayed if you are using an insert. Press **CHOICE** until the appropriate insert is displayed.

5. Press **ENTER** to choose the insert.

6. Press **ENTER** to begin the analysis; operational status messages display during analysis.

7. When the analysis has finished, the pycnometer beeps three times and the display returns to the **Reload** prompt.

Do not remove the cell chamber cap when the pycnometer is pressurized. Sample may be discharged from the chamber.

8. Be sure the pressure reads approximately 0 (zero) on the display, then remove the cell chamber cap and remove the sample from the chamber.

9. Replace the cell chamber cap, or load another sample.

Method A

This section provides steps for performing an analysis using Method A. This method measures the closed cell fraction and corrects for the cells damaged when cutting the sample (as defined in ASTM D-3576).

1. Press **Alt + 4**; the **Sample ID** prompt is shown; enter an appropriate identification. You can enter up to 20 numbers and dashes; press **.** (decimal) to insert a dash.

2. Press **ENTER**; the **Description** prompt is displayed. You can enter up to 20 numbers and dashes on each line; press **.** (decimal) to insert a dash.

   Most users display this prompt only if they have a computer keyboard attached to the pycnometer.

3. Press **ENTER**; the **Sample Mass** prompt is displayed; enter the mass (weight) of your sample.

The remaining steps of this procedure assume you have chosen Compute in the Set-up function. If you chose User-Computed, the Geometric Volume and Active Area prompts are displayed enabling you to enter appropriate values.

4. Press **ENTER**; the **Shape Type** prompt displays unless you chose a specific shape in the Set-up function; press **CHOICE** until the desired shape is displayed.

5. Press **ENTER** to accept the shape; prompts display as follows:

If you choose...	These prompts display...
Cube	**Edge Length**; enter the appropriate value, then press **ENTER**.
	Number of pieces; enter the number of pieces in the cup, then press **ENTER**.
	Number of skins; enter the appropriate value, then press **ENTER**.
Cylinder	**Cylinder diameter**; enter the diameter of the cylinder, then press **ENTER**.
	Cylinder height; enter the height of the cylinder, then press **ENTER**.
	Number of pieces; enter the number of pieces in the cup, then press **ENTER**.
	Number of skins; enter the appropriate value, then press **ENTER**.
Rectangular	**Longest edge**; enter the appropriate value, then press **ENTER.**
	Shortest edge; enter the appropriate value, then press **ENTER.**
	Remaining edge; enter the appropriate value, then press **ENTER.**
	Number of pieces; enter the number of pieces in the cup, then press **ENTER**.
	Number large skins; enter the appropriate value, then press **ENTER**
	Number small skins; enter the appropriate value, then press **ENTER**
	Number remaining skins; enter the appropriate value, then press **ENTER**

6. The **Chord Length** or **Cell Diameter** prompt is displayed (depending on the choice made in the Set-up function); enter an appropriate value.

7. Press **ENTER** to start the analysis.

Methods B and C

This section provides steps for performing an analysis using Method B or C.

- Method B corrects for cut cells using two measurements.
- Method C performs only one measurement; it does not correct for cut cells.

1. Press **Alt + 4**; the **Sample ID** prompt is shown; enter an appropriate identification. You can enter up to 20 numbers and dashes; press **.** (decimal) to insert a dash.

2. Press **ENTER**; the **Description** prompt is displayed. You can enter up to 20 numbers and dashes on each line; press **.** (decimal) to insert a dash.

   Most users display this prompt only if they have a computer keyboard attached to the pycnometer.

3. Press **ENTER**; the **Sample Mass** prompt is displayed; enter the mass (weight) of your sample.

The remaining steps of this procedure assume you have chosen Compute in the Set-up function. If you chose User-Computed, the Geometric Volume prompt is displayed enabling you to enter an appropriate value.

4. Press **ENTER**; the **Shape Type** prompt displays unless you chose a specific shape in the Set-up function; press **CHOICE** until the desired shape is displayed.

5. Press **ENTER** to accept the shape; prompts display as follows:

If you choose...	These prompts display...
Cube	**Edge Length**; enter the appropriate value, then press **ENTER**.
	Number of pieces; enter the number of pieces in the cup, then press **ENTER**.
Cylinder	**Cylinder diameter**; enter the diameter of the cylinder, then press **ENTER**.
	Cylinder height; enter the height of the cylinder, then press **ENTER**.
	Number of pieces; enter the number of pieces in the cup, then press **ENTER**.
Rectangular	**Longest edge**; enter the appropriate value, then press **ENTER.**
	Shortest edge; enter the appropriate value, then press **ENTER.**
	Remaining edge; enter the appropriate value, then press **ENTER.**
	Number of pieces; enter the number of pieces in the cup, then press **ENTER**.

6.

7. Press **ENTER** to start the analysis.

   - **Method C** analysis: when the analysis is complete, you are returned to the **Reload** prompt.

   - **Method B** analysis: continue with the next step.

8. After the first measurement is complete (Method B), the **Cut sample** prompt is displayed. Perform the following steps:

   a. Remove the sample chamber cap, then remove the sample cup (with sample) from the chamber. Replace the cap while performing the next step.

   b. Cut the sample, place it back into the cup.

   c. Remove the cap, place the cup back into the sample chamber; replace the cap.

9. Press **ENTER** to perform the remaining measurement. After the analysis is complete, you are returned to the **Reload** prompt.

Method D

This method is a compressibility test and is only an approximate indication; it is not intended to be an exact measure of the volume compressibility.

1. Press **Alt + 4**; the **Sample ID** prompt is shown; enter an appropriate identification. You can enter up to 20 numbers and dashes; press **.** (decimal) to insert a dash.

2. Press **ENTER**; the **Description** prompt is displayed. You can enter up to 20 numbers and dashes on each line; press **.** (decimal) to insert a dash.

   Most users display this prompt only if they have a computer keyboard attached to the pycnometer.

3. Press **ENTER**; the **Sample Mass** prompt is displayed; enter the mass (weight) of your sample.

The remaining steps of this procedure assume you have chosen Compute in the Set-up function. If you chose User-Computed, steps 4 through 8 are not applicable; the Geometric Volume prompt is displayed enabling you to enter an appropriate value.

4. Press **ENTER**; the **Shape Type** prompt displays unless you chose a specific shape in the Set-up function; press **CHOICE** until the desired shape is displayed.

5. Press **ENTER** to accept the shape; prompts display as follows:

If you choose	These prompts display .....
Cube	**Edge Length**; enter the appropriate value, then press **ENTER**.
	Number of pieces; enter the number of pieces in the cup, then press **ENTER**.
Cylinder	**Cylinder diameter**; enter the diameter of the cylinder, then press **ENTER**.
	Cylinder height; enter the height of the cylinder, then press **ENTER**.
	Number of pieces; enter the number of pieces in the cup, then press **ENTER**.
Rectangular	**Longest edge**; enter the appropriate value, then press **ENTER.**
	Shortest edge; enter the appropriate value, then press **ENTER.**
	Remaining edge; enter the appropriate value, then press **ENTER.**
	Number of pieces; enter the number of pieces in the cup, then press **ENTER**.

6. The **Initial Pressure** prompt is displayed; enter an appropriate pressure.

7. Press **ENTER**; the **Pressure increment** prompt is displayed; enter an appropriate value.

8. Press **ENTER**; the **Final Pressure** prompt is displayed; enter an appropriate pressure.

9. Press **ENTER**; the prompt for starting the analysis is displayed.

10. Press **ENTER** to start the analysis.

Method E

This method is a cell fracture test; a perfectly rigid foam is assumed for this method.

1. Press **Alt + 4**; the **Sample ID** prompt is shown; enter an appropriate identification. You can enter up to 20 numbers and dashes; press **.** (decimal) to insert a dash.

2. Press **ENTER**; the **Description** prompt is displayed. You can enter up to 20 numbers and dashes on each line; press **.** (decimal) to insert a dash.

   Most users display this prompt only if they have a computer keyboard attached to the pycnometer.

3. Press **ENTER**; the **Sample Mass** prompt is displayed; enter the mass (weight) of your sample.

The remaining steps of this procedure assume you have chosen Compute in the Set-up function. If you chose User-Computed, steps 4 through 7 are not applicable; the Geometric Volume prompt is displayed enabling you to enter an appropriate value.

4. Press **ENTER**; the **Shape Type** prompt displays unless you chose a specific shape in the Set-up function; press **CHOICE** until the desired shape is displayed.

5. Press **ENTER** to accept the shape; prompts display as follows:

If you choose	These prompts display .....
Cube	**Edge Length**; enter the appropriate value, then press **ENTER**.
	Number of pieces; enter the number of pieces in the cup, then press **ENTER**.
Cylinder	**Cylinder diameter**; enter the diameter of the cylinder, then press **ENTER**.
	Cylinder height; enter the height of the cylinder, then press **ENTER**.
	Number of pieces; enter the number of pieces in the cup, then press **ENTER**.
Rectangular	**Longest edge**; enter the appropriate value, then press **ENTER.**
	Shortest edge; enter the appropriate value, then press **ENTER.**
	Remaining edge; enter the appropriate value, then press **ENTER.**
	Number of pieces; enter the number of pieces in the cup, then press **ENTER**.

6. The **Low pressure** prompt is displayed; enter an appropriate pressure.

7. Press **ENTER**; the **Fracture pressure** prompt is displayed; enter an appropriate pressure.

8. Press **ENTER**; the prompt for starting the analysis is displayed.

9. Press **ENTER** to start the analysis.

Canceling an Analysis

You may cancel an analysis that is in progress by pressing **Alt + Clear**. The following message is displayed:

```
Unit[n]     SN1234     10 cm3
Analyze
[Enter] to cancel
automatic operation.
```

Press **ENTER** within five seconds to cancel the operation; notification that the automatic operation has been cancelled will be displayed.

When you cancel an operation, messages are displayed indicating that termination is in progress. The termination process, which vents the system, takes about 30 seconds and returns to the **Reload** prompt.

To view the data that have been collected, press **CHOICE**; the following prompt is displayed if no cycles have been completed.

```
Unit[n]     SN1234     10 cm3
            X - X - X
DTA_ERR:
No data to compute
```

Viewing and Printing Data Results

After analysis or calibration, the display returns to the **Reload** prompt.

```
Unit[n]     SN1234   10 cm3
             X - X - X
Reload                    *
P = (current pressure)
```

An asterisk (*) indicates error message(s) exist

A report is generated automatically to the destination you select at the **Setup** > **Report Options** as follows:

- **Printer**: report is automatically sent to the printer
- **Transmission line**: report is automatically sent through the serial line to an attached device for this purpose
- **E-mail**: report is e-mailed to the address you specified (when connected to a network)

An asterisk at the **Reload** prompt indicates that error messages have been generated during operation. (Refer to **ERROR MESSAGES**, page **A-1** for additional information on viewing and deleting error messages.) To view report data by points, use the **Review** function explained on page **4-12**.

View Data

Reports are generated after analysis and calibration, and remain available for viewing or printing until another automatic operation (other than zero) is performed. When you perform an automatic operation, data from the previous operation are no longer available for viewing on the display.

A display report is always generated regardless of the specified destination and contains data as follows:

- **Analysis**: the average density (or volume) and the deviation from the mean.
- **Calibration**: average cell (or expansion volume) and the deviation from the mean

Print Data

To retain a record of analysis or calibration data, press **Alt + 6** to generate a report to an attached printer. Printed reports contain data as follows:

- **Analysis**: volume, density, and deviation for each cycle, as well as an average of all cycles. The report also contains the date and time the analysis was started and completed and the temperature of the cell chamber.
- **Calibration**: cell and expansion volumes and deviations for each cycle, as well as an average of all cycles. The report also contains the date and time the calibration started and completed.

Reviewing Data

The Review function enables you to review and edit the results of the last operation – analysis or calibration – along with its entered parameters. It is important that you review and print the report (if desired) before starting another operation. Data are no longer available for review on the display after another operation is started; however, data results are saved in the control module and can be reviewed using a web browser (refer to **Using a Web Browser**, page **4-14**).

Analysis Data

The prompts that display during the review for an analysis depend on the options you choose in **Setup** > **Analysis Parameters** and **Report Options**. Therefore, all the prompts given in this procedure may not apply to your analysis.

Values in the fields of these prompts may be edited if desired.

1. Press **Alt + 5**; the **Sample ID** prompt containing the sample identification is displayed.

2. Press **ENTER**; the **Description** prompt containing an additional description is displayed. This prompt typically is not used unless you have a keyboard attached to your analyzer.

3. Press **ENTER**; the **Sample Mass** prompt containing your sample's mass is displayed.

4. Press **ENTER**; the **Start** prompt containing the start date and time of your analysis is displayed.

5. Press **ENTER**; the **End** prompt containing the ending date and time of your analysis is displayed.

6. Press **ENTER**; the first of the prompts containing data is displayed.

```
Unit[n]     SN1234     10 cm3
            X - X - X
Dn [n] = (density)
Dv [n] = (deviation)
```

or

```
Unit[n]     SN1234     10 cm3
            X - X - X
V [n] = (volume)
Dv [n] = (deviation)
```

   The [n] displayed in the example prompts represents the cycle number.

7. Continue pressing **ENTER** to view data.

   Press **CHOICE** to exclude data from report calculations; an asterisk will display indicating that it will be excluded.

8. Press **SAVE** to return to the **Reload** prompt.

9. For a record of analysis results, press **Alt + 6** to print to an attached printer.

Calibration Data

The prompts that display during a review of calibration data depend on the options you specify in **Setup** > **Analysis Parameters** and **Report Options.**

You may edit the information in the prompts if desired.

1. Press **Alt + 5**; the **Chamber Insert** prompt showing the insert (if used) is displayed.
2. Press **ENTER**; the volume of the calibration standard is displayed.
3. Press **ENTER**; the **Which Chamber** prompt is displayed.
4. Press **CHOICE** to select the chamber for which you wish to view volume results.
5. Press **ENTER**; a prompt displaying the starting time and date is displayed.
6. Press **ENTER**; a prompt displaying the ending time and date is displayed.
7. Press **ENTER**; the first of the prompts containing data is displayed.

```
Unit[n]     SN1234     10 cm3
            X - X - X
Cell [n] = (volume)
Dev [n] = (deviation)
```

or

```
Unit[n]     SN1234     10 cm3
            X - X - X
Exp [n] = (volume)
Dev [n] = (deviation)
```

   The [n] displayed in the example prompts represents the cycle number.

8. Continue pressing **ENTER** to view all of the data.

   Press **CHOICE** to exclude data from report calculations; an asterisk will display indicating that it will be excluded.

9. Press **SAVE** to return to the **Reload** prompt.
10. For a record of calibration data, press **Alt + 6** to print to an attached printer.

Using a Web Browser

Data results for the last five analyses are saved in the control module for each attached unit. These results can be viewed by accessing a web browser.

To use this feature, you must be connected to a network via an ethernet cable and have a keyboard attached to a USB port.

These steps assume an IP address has already been assigned. If an address has not been assigned, refer to Communications, page B-19 for information on obtaining one.

1. Make a note of the IP address:

   a. Press **Alt + 2** to access **Set Up**.

   b. Press **CHOICE** until **Communications** is displayed, then press **ENTER**. The following prompt is displayed:

   ```
   Unit[n]     SN1234     10 cm3
   Communications
   IP Address?
   DHCP
   ```

   The fourth line may show **Specify**, depending on the manner in which the IP address was assigned (refer to **Communications**, page **B-19** for additional information on this prompt).

   c. Press **ENTER** to view the assigned address:

   ```
   Unit[n]     SN1234     10 cm3
   Communications
   Assigned Address:
   (assigned address)
   ```

   If the address was specified, the third line of the display shows **IP Address?** and the fourth line shows the entered address. This line is editable since it is specified and not assigned automatically. An assigned address cannot be edited.

   d. Press **Alt + CLEAR** to return to the **Reload** prompt.

2. Access your web browser.

3. Enter your IP address in the **Address** field of the web browser.

   Address http://[IP address]

   This will consist of 12 numbers in the following format: nnn.nnn.nnn.nnn.

4. Press **Enter** on your computer keyboard; a window containing the serial numbers of the attached unit(s) is displayed.

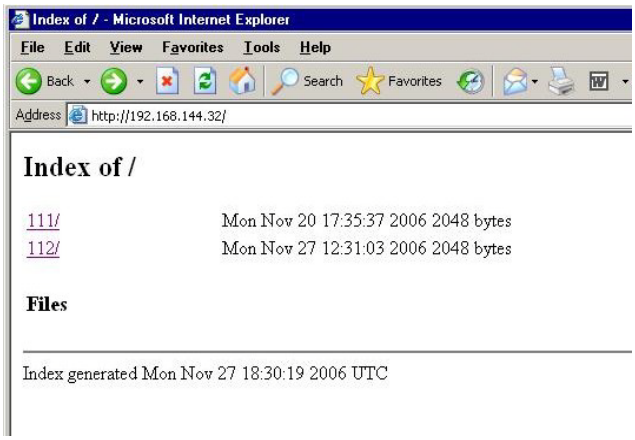

5. Click on the serial number of the unit containing the data you wish to review; a window displaying the data files for the last five analyses, and for the zero (slope) and volume offset files is displayed

Untitled indicates sample identifications were not used.

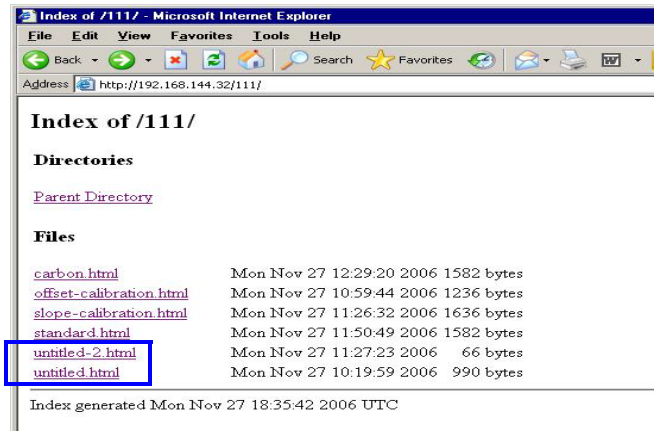

The files are in html format and are assigned the name used as the **Sample ID**. If sample identifications are not used, the name “Untitled” is assigned and is appended numerically for each file (as shown in the last two entries of the above example).

6. Click on the desired file to view the data results.

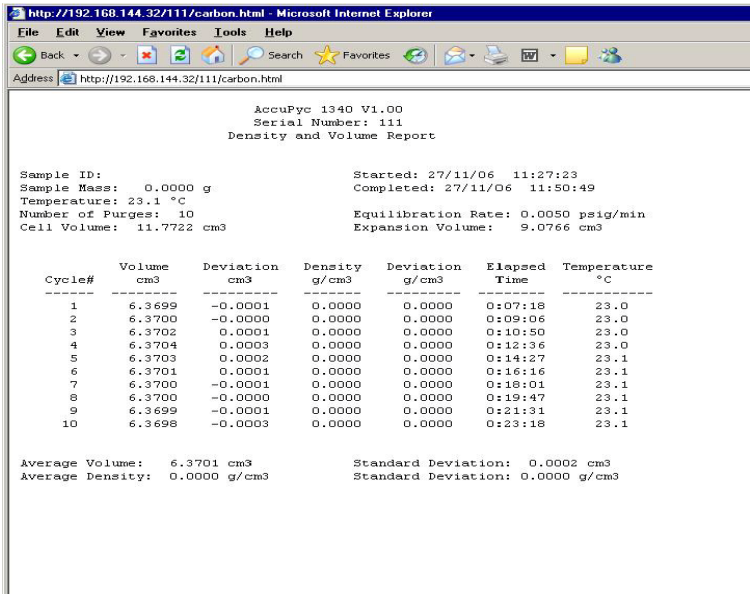

AccuPyc 1340 V1.00
Serial Number: 111
Density and Volume Report

Sample ID:
Sample Mass: 0.0000 g
Temperature: 23.1 °C
Number of Purges: 10
Cell Volume: 11.7722 cm3

Started: 27/11/06 11:27:23
Completed: 27/11/06 11:50:49
Equilibration Rate: 0.0050 psig/min
Expansion Volume: 9.0766 cm3

Cycle#	Volume cm3	Deviation cm3	Density g/cm3	Deviation g/cm3	Elapsed Time	Temperature °C
1	6.3699	-0.0001	0.0000	0.0000	0:07:18	23.0
2	6.3700	-0.0000	0.0000	0.0000	0:09:06	23.0
3	6.3702	0.0001	0.0000	0.0000	0:10:50	23.0
4	6.3704	0.0003	0.0000	0.0000	0:12:36	23.0
5	6.3703	0.0002	0.0000	0.0000	0:14:27	23.1
6	6.3701	0.0001	0.0000	0.0000	0:16:16	23.1
7	6.3700	-0.0001	0.0000	0.0000	0:18:01	23.1
8	6.3700	-0.0000	0.0000	0.0000	0:19:47	23.1
9	6.3699	-0.0001	0.0000	0.0000	0:21:31	23.1
10	6.3698	-0.0003	0.0000	0.0000	0:23:18	23.1

Average Volume: 6.3701 cm3
Average Density: 0.0000 g/cm3

Standard Deviation: 0.0002 cm3
Standard Deviation: 0.0000 g/cm3

You can also click on the file for a current operation to monitor its progress.

7. Use the **File > Print** option to print a copy of the results.

5. TROUBLESHOOTING AND MAINTENANCE

This chapter describes common operational problems, their solutions, and maintenance procedures. If further assistance is needed after following the procedures in this chapter, contact a Micromeritics Service Representative.

Troubleshooting

Operating problems encountered with the pycnometer are usually easily corrected. Typical problems and the steps required to correct them are described in the following table.

Table 5-1. Common Operational Problems

Problem	Cause	Solution
Power indicator did not illuminate when analyzer was turned on	Power cord not fully inserted at one end or the other.	Insert power plug firmly into outlet socket; insert unit connector firmly into power connector opening.
	No power at outlet	Plug in lamp or small appliance to test outlet. If there is no power, contact electrician.
	Plug prongs bent so that contact not made at outlet.	Wiggle power plug at outlet. If indicator does not illuminate, have electrician adjust prongs or replace outlet or plug.
	Power cord damaged	Have electrician check cord using test meter. Replace if defective.
	Loose internal connection, broken wire, or failure of internal power supply.	Contact a Micromeritics Service Representative for repair or replacement information.

Problem *(continued)*	**Cause**	**Solution**
Specified pressure not reached or maintained.	Chamber cap not properly closed.	Close chamber cap by turning fully clockwise.
	Chamber cap contains dust or debris or the O-ring is not properly greased.	Using a lint-free tissue, clean the chamber cap and the rim of the cell chamber. Lightly grease the chamber cap O-ring (refer to **Greasing the Chamber Cap O-Ring**, page **5-4**.
	The chamber cap O-ring is not properly seated.	Check the chamber cap. Ensure that the O-ring is properly seated and that it contains no scratches or cuts.
	The chamber cap O-ring is cut or scratched.	Replace the O-ring in the chamber cap (refer to **Replacing the Chamber Cap O-Ring**, page **5-5**
	Gas leaks in the cell chamber or expansion chamber.	Check the pycnometer for leaks (refer to **Checking the Cell and Expansion Chambers for Leaks**, page **5-7**).
	The helium tank is low on gas, or empty.	Check tank. Minimum recommended pressure is 200 psig.
	The Shut-Off valve on the gas bottle is closed.	Ensure that the valve is open.
	Pressure regulator defect or the pressure is set too low.	Check regulator to be sure it is set properly. Call a Micromeritics Service Representative, if necessary.
	The Zero offset (of pressure transducer) is too low.	Check offset by opening chamber cap. If pressure is negative (displayed on instrument schematic), run a new zero offset.
	Dust filter on 2000 cm^3 unit is clogged or leaking to atmosphere.	Clean the dust filter. Refer to **Cleaning the Dust Filter (2000-cm3 units only)**, page **5-9**.

Problem *(continued)*	**Cause**	**Solution**
Helium drained from tank.	Leaks in the gas line connection.	Pressurize the system. Close, then open the gas bottle Shut-Off valve. If the needle on the pressure gauge on the jumps abruptly, a leak in the gas line connections may be indicated. Check all gas line connections. Refer to **Checking the Cell and Expansion Chambers for Leaks**, page **5-7**.
	Pycnometer was left in manual mode with all the valves open or the fill valve open and chamber cap off.	Close all valves, then attach a new tank of helium.
Unit will not equilibrate, or results are not reproducible.	Sample outgassing.	Prior to analysis, remove moisture and contaminants from the sample. (Refer to **Preparing and Loading a Sample**, page **4-13**.)
	Pycnometer leaks.	Check cap O-ring for defects. Regrease or replace the O-ring, if necessary.
		Using the instrument schematic with Manual Mode enabled and with the cap installed, open all valves. With helium flowing through the pycnometer, open and close the expansion valve repeatedly for approximately one minute. This will remove lint, which may cause a leak, from the valve seat. Repeat the process for the vent valve with the inlet and expansion valves open.
	Dust filter on 2000 cm^3 unit is clogged or leaking to atmosphere.	Clean the dust filter. Refer to **Cleaning the Dust Filter (2000-cm3 units only)**, page **5-9**.

Maintenance

Calibrating the Pycnometer

You should check or calibrate the pycnometer every time you restart it. For a quick check, run an analysis with an empty cup to see how close the average volume is to 0. It should be ±0.05% of full-scale. If it is not within ±0.05% of full-scale, calibrate according to the instructions provided in **Calibrating the Pycnometer**, page **2-10**. When you calibrate the pycnometer, cell volume and expansion volume in the set-up parameters are updated automatically.

Greasing the Chamber Cap O-Ring

The cell chamber cap contains an o-ring that requires routine maintenance because it is so often exposed to atmospheric conditions. The chamber cap O-ring should be greased at the beginning of each period of use. Wear rubber gloves to prevent contaminating the grease with oil from your fingertips.

1. Turn the chamber cap counterclockwise and lift it from the chamber.
2. Place the chamber cap on a clean surface, with the O-ring side exposed.
3. Place a small amount of Dow Corning High vacuum grease (or equivalent) on your index finger.
4. Run your index finger around the O-ring groove.

5. Replace the chamber cap.

Replacing the Chamber Cap O-Ring

Fine fibers and particles between the O-ring and its sealing surfaces can cause leaks, as can scratches or cuts in the O-ring or in the metal surfaces. When it is necessary to replace the O-ring, follow these steps.

1. Using a pointed tool, carefully remove the o-ring from its groove in the cap. A small niche is provided at the groove for placement of the tool.

Be careful not to scratch the metal surface of the chamber cap. Scratches could result in an imperfect seal.

2. Clean the groove in the chamber cap using a small brush or lint-free tissue moistened with isopropyl alcohol.

3. Allow the chamber cap to dry thoroughly.

4. Place a small amount of Dow Corning High vacuum grease (or equivalent) on your index finger. Touch your thumb with your index finger to place grease on both fingers.

Apply the grease sparingly; too much grease may alter cell volume, while too little grease results in an imperfect seal and leaks.

5. Grasp the O-ring with the two greased fingers.

6. With the other hand, pull the O-ring through the greased fingers until the entire O-ring is greased.

7. Place the O-ring back into the groove on the cap and, with the greased index finger, gently press it back into position. After the O-ring is fully seated, grease the groove with your index finger without applying additional grease.

8. Replace the chamber cap.

Checking the Cell and Expansion Chambers for Leaks

To check the cell and expansion chambers for leaks perform the following procedure. The valve states are shown at the end of each pertinent step (steps in which valve actions have been taken). The first character represents the Fill valve, the second character represents the Expansion valve, and the third character represents the Vent valve.

Before performing this procedure, check the chamber cap to ensure that it is not the source of leaks. It should be free from particles, the O-ring should be properly seated, and it should not contain excessive grease.

1. Allow the pycnometer to equilibrate thermally in a room having a stable temperature.
2. Press **ALT + 1** to enter manual mode.
3. If the system has been open, manually purge the system before proceeding as follows:
   a. Press **8** to open the Expansion valve and **9** to close the Vent valve; **X - O - X**.
   b. Press **7** to open the Fill valve and fill the sample chamber to the desired pressure.
   c. Press **7** to close the Fill valve and **9** to open the Vent valve; **X - O - O**.
   d. Repeat this procedure two or three times.
   e. Press **8** to close the Expansion valve; **X - X - O**.
4. Press **7** to open the Fill valve; **O - X - O**.
5. Fill the sample chamber to 19.5 psig.
6. Press **7** to close the Fill valve; **X - X - O**.
7. Observe the pressure display. After an equilibration period (about 20 to 30 seconds), the pressure should not vary more than 0.005 psig/min.
   - If the pressure does not vary more than 0.005 psig/min, proceed to step 8.
   - If the pressure varies more than 0.005 psig/min., temperature instability or a leak may be indicated. Vent the system, then repeat steps 4 through 7 several times to verify that a leak is indicated. If a leak is indicated, call a Micromeritics Service Representative.
8. Press **9** to close the Vent valve, **8** to open the Expansion valve, and **7** to open the Fill valve; **O - O - X**.
9. Fill the chambers to 19.5 psig.

10. Press **7** to close the Fill valve; **X - O - X**.

11. Observe the pressure display. After an equilibration period (about 20 to 30 seconds), the pressure should not vary more than 0.005 psig/min.

    If the pressure varies more than 0.005 psig/min, temperature instability or a leak may be indicated. Vent the system, then repeat steps 8 through 11 several times to verify that a leak is indicated. If a leak is indicated, call a Micromeritics Service Representative.

Cleaning the Dust Filter (2000-cm^3 units only)

Dust from the sample may be carried into the instrument plumbing. A dust filter protects the valves to minimize valve leaks. When it is necessary to clean the filter, follow these steps:

1. Close the gas line (Fill) valve. Open the expansion and vent valves to ensure that the system is not under pressure.

2. At the lower rear of the instrument, remove the two screws which hold the dust filter cover and remove the cover plate.

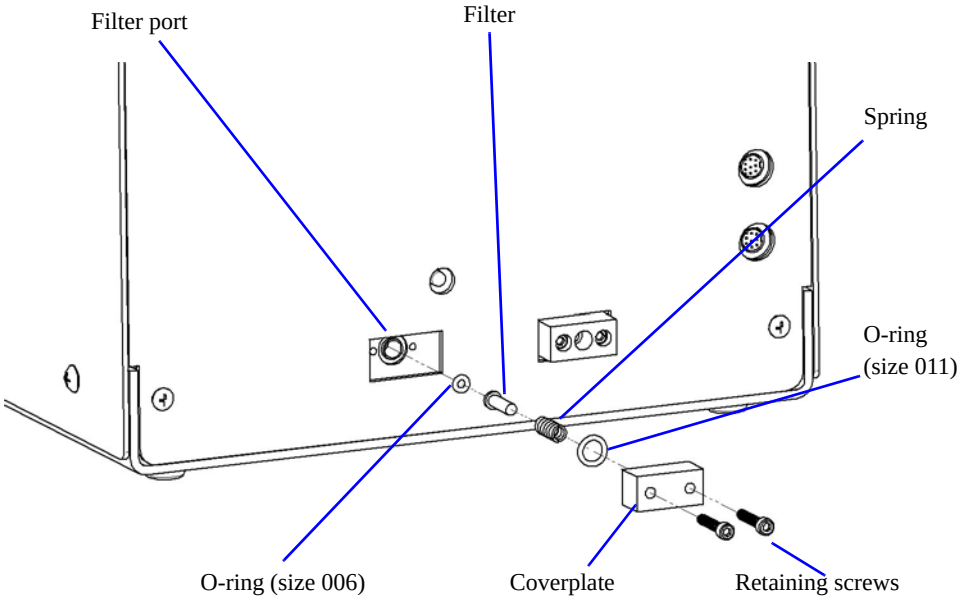

3. Remove the spring and the filter. Remove the small O-ring inside the filter port.

4. Clean all parts with alcohol. The filter may require sonication to dislodge dust. It should be replaced if it becomes severely clogged.

5. Inspect the O-rings before re-assembly. A very thin coating of vacuum grease may be used.

6. Reassemble.

7. Check for leaks:

   a.) Fill the system with gas.

   b.) Open expansion valve.

   c.) Check for leaks by applying a leak detecting liquid around the dust filter cover.

Cleaning the Pycnometer

The exterior casing of the pycnometer may be cleaned using a clean cloth, dampened with isopropyl alcohol (IPA), a mild detergent solution, or a 3% hydrogen peroxide solution.

Do not immerse the pycnometer or the power cord in any liquids. Doing so could result in electrical shock to personnel or damage to the unit.

Do not allow liquid to penetrate the casing of the pycnometer. Doing so could result in damage to the unit.

Recovering from a Power Failure

The pycnometer saves entered settings and collected data in case of a power failure. Set up parameters and data will still be present when power is restored. If an automatic operation was in progress when the power failure occurred, it will be canceled when the pycnometer restarts. Any data collected during the automatic operation will still be present, but the operation should be started again in order to produce complete results.

6. ORDERING INFORMATION

The AccuPyc components and accessories can be ordered using one of the following methods:

- Call our Customer Service Department at (770) 662-3636
- Email orders to *orders@micromeritics.com*
- Contact your local sales representative

When ordering, please use the information provided in this chapter to place your order

Part Number	Item and Description
Analyzer Equipment	
134-00000-00	AccuPyc II 1340, 10-cm^3 capacity
134-00001-00	AccuPyc II 1340, 1-cm^3 capacity
134-00002-00	AccuPyc II 1340, 100-cm^3 capacity
134-00005-20	Control Module, no sample compartment
134-00010-00	AccuPyc II 1340TC, 10-cm^3 capacity
134-00020-00	AccuPyc II 1340TC, 100-cm^3 capacity
134-00030-00	AccuPyc II 1340 Glove Box, 10-cm^3 capacity
134-00031-00	AccuPyc II 1340 Glove Box, 1-cm^3 capacity
134-00032-00	AccuPyc II 1340 Glove Box, 100-cm^3 capacity
134-00033-00	AccuPyc II 1340 Glove Box, 350-cm^3 capacity
134-00034-00	AccuPyc II 1340 Glove Box, 2000-cm^3 capacity
134-00040-00	Analysis module, 10-cm^3 capacity
134-00041-00	Analysis module, 1-cm^3 capacity
134-00042-00	Analysis module, 100-cm^3 capacity
134-00043-00	Analysis module, 350-cm^3 capacity
134-00044-00	Analysis module, temperature control, 10-cm^3 capacity
134-00045-00	Analysis module, temperature control, 100-cm^3 capacity
134-00046-00	Analysis Module, 2000-cm^3 capacity

Part Number	Item and Description *(continued)*
Cables	
003-60623-00	Cable, 2 ft; for connecting analysis modules
003-60623-01	Cable, 25 ft; for connecting Control module to Glove box unit
003-63801-00	Ethernet cable, cross-over
Calibration Kit	
133-34900-00	Calibration Standard Kit, 10-cm^3; contains two calibration standards and one sample cup
133-34901-00	Calibration Standard Kit, 2000-cm^3; contains one calibration standard and one 2000-cm^3 sample cup
133-34902-00	Calibration Standard Kit, 100-cm^3; contains one calibration standard and one 100-cm^3 sample cup
133-34903-00	Calibration Standard Kit, 350-cm^3; contains three calibration standard and one sample cup
134-34901-00	Calibration Standard Kit, 2000-cm^3; contains one calibration standard and one 2000-cm^3 sample cup
Chamber Cap O-rings	
004-25032-00	Chamber cap O-ring, 2000-cm^3
004-25575-00	Chamber cap O-ring, 10 cm^3
004-25577-00	Chamber cap O-ring, 100 cm^3
004-25637-00	Chamber cap O-ring, 1 cm^3
004-25689-00	Chamber cap O-ring, 350 cm^3

Part Number	Item and Description *(continued)*
Dust Filter Components (for 2000 cm³ units only)	
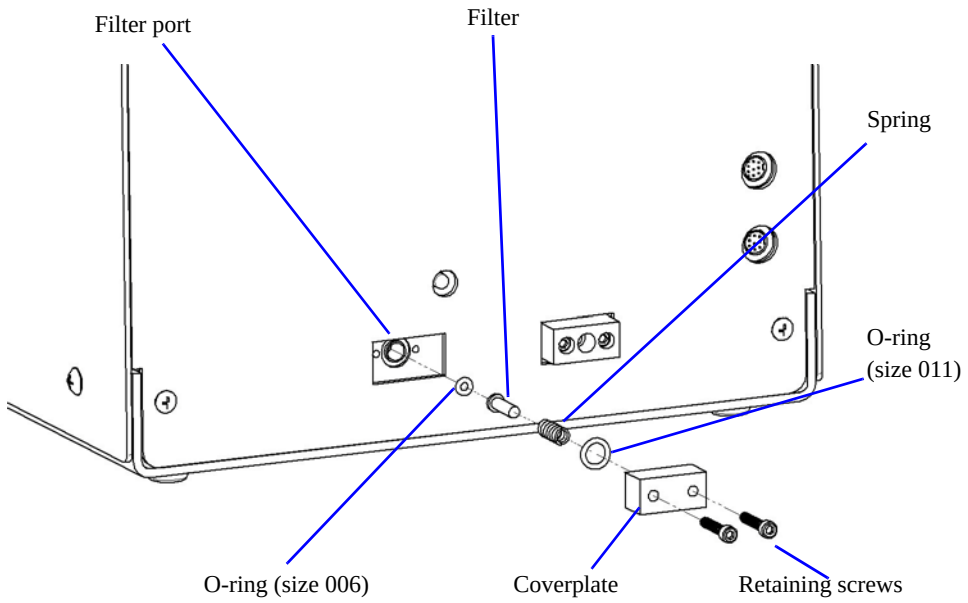	
004-25006-00	O-ring, -006 70 DURO BUNA-N
004-25011-00	O-ring, -011 70 DURO BUNA-N
004-25312-00	Compression Spring
004-27082-00	Filter, Line, 10 Micron
Equipment (Optional)	
133-33604-00	MultiVolume Kit, for 100-cm³ pycnometer; includes 10- and 35-cm³ inserts and appropriate sample cups
133-33605-00	MultiVolume Kit, for 10-cm³ pycnometer; includes 1- and 3.5-cm³ inserts and appropriate sample cups
134-33006-00	MultiVolume Kit, for 1-cm³ pycnometer; includes a 0.1-cm³ insert/sample cup combination
134-33605-00	MultiVolume Kit, for 2000-cm³ pycnometer; includes a 650-cm³ and 1300-cm³ cups, inserts, and reference standards.

Part Number	Item and Description *(continued)*
Filtered Cup Assemblies (Optional)	
133-25862-00	Filtered cup assembly, 10 cm^3; used to constrain powdered samples
133-25863-00	Filtered cup assembly, 100 cm^3; used to constrain powdered samples
Filtered Cup Assembly Components (for 100cm^3 units only)	
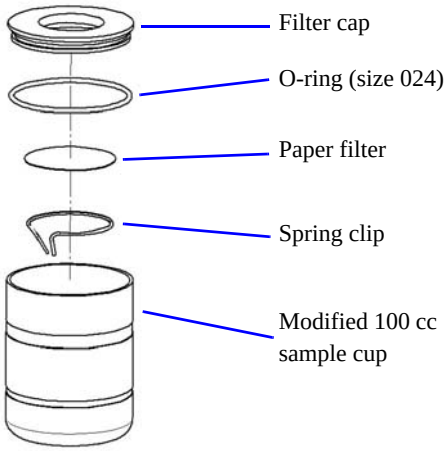	
004-25299-00	O-ring, size -024 70 DURO BUNA-N
004-27055-00	Paper filter (100 pack)
133-25845-01	Modified 100 cc sample cup
133-25901-00	100 cc sample cup filter cap
133-25902-00	Sping clip for 100 cc sample cup cap
Gas Accessories	
004-25549-00	Reducer, 1/8-in. tube × 1/4-in. tube
004-62230-58	Gas regulator, 30 psig, CGA 580
134-33020-00	Multigas Manifold; enables you to connect multiple gases to the analysis unit
290-25846-00	Gas inlet line assembly
Operating Supplies	
008-16045-00	High Vacuum grease, Dow Corning

Part Number	Item and Description *(continued)*
Power Accessories	
003-40054-00	AC/DC power supply, external
003-60101-00	Power cord, US, Canada, Japan
003-60101-05	Power cord, Schuko, for European countries
134-34007-00	Power Adapter
Sample Cups	
133-25805-00	Sample cup, 10-cm^3 capacity
133-25805-02	Sample cup, 10-cm^3 capacity, stainless steel
133-25845-00	Sample cup, 100-cm^3 capacity
133-25845-02	Sample cup, 350-cm^3 capacity
133-25855-02	Sample cup, 1-cm^3 capacity
134-25874-00	Sample cup, 2000-cm^3 capacity (used with CorePyc)
134-25875-00	Sample cup, 1300-cm^3 capacity (used with CorePyc MultiVolume kit)
134-25876-00	Sample cup, 650-cm^3 capacity (used with CorePyc MultiVolume kit)
135-25804-00	Sample cup, 35 cc capacity (used with 100 cc MultiVolume Kit)
135-25805-00	Sample cup, 3.5 cc capacity (used with 10 cc MultiVolume Kit)

Keypad Templates	
134-42701-01	French template
134-42701-02	German template
134-42701-03	Spanish template
134-42701-04	Italian template
Software and Manuals	
134-33005-00	Windows Upgrade for FoamPyc; includes latest version software and operator’s manual
134-42801-00	Operator’s manual, AccuPyc (keypad version)
134-42803-00	Operator’s manual, AccuPyc 1340 FoamPyc (keypad version)

A. ERROR MESSAGES

This appendix contains an alphabetical listing of the messages that may appear in the display of the pycnometer.

Operational and report error messages generated during an analysis or calibration are placed in a queue, along with report data. Error messages are indicated with an asterisk at the **Reload** prompt after the operation is completed.

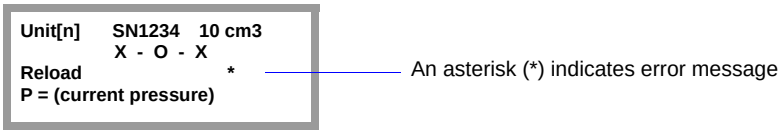

Messages and data are placed in the following order:

- Operational error messages
- Report error messages
- Report data

Press **CHOICE** to cycle through the messages and to the data. If you wish to delete the message after viewing its contents, press **CLEAR**. If you aren't clear as to why the message was displayed, look it up in this appendix for a cause and a resolution before deleting. Messages that are not cleared will remain in the queue until the next analysis or calibration is performed; at that time, any remaining messages will be cleared automatically.

When you see NN/ZZ in a message listed below, **NN** = number of cycles completed and **ZZ** = number of cycles requested.

Add Unit

Cause A: A new analysis module has been attached to the instrument where previously a different module had been attached.

Action A: Press **Choice** and select **Yes** to add the new analysis module.

Cause B: An incorrect serial number was read by the analysis module.

Action B: Press **Choice** and select **No** to use the serial number and calibration information stored in the command module. If this message displays every time you turn on the instrument, contact your service representative.

ANLSERR: Eq failure
NN/ZZ cycles completed

Cause A: The sample being analyzed failed to equilibrate in 1000 seconds.

Action A: Check the system carefully for leaks as described in Checking the Cell and Expansion Chambers for Leaks later in this chapter. Make sure the sample is properly prepared before performing an analysis.

Cause B: Sample (foams, organics, etc.) absorbs helium slowly.

Action B: Set the equilibration rate to progressively higher values until reasonable equilibration times (15 sec to 120 sec) are achieved.

ANLSERR: Fill failure
NN/ZZ cycles completed

Cause: There was insufficient pressure to allow filling within five minutes during an analysis.

Action: Increase the regulator pressure or, if there is insufficient helium in the tank, obtain a new tank of helium.

ANLSERR: Overrange
NN/ZZ cycles completed

Cause A: A pressure overrange occurred during an analysis because the regulator pressure is set too high.

Action A: Adjust the pressure so that it is equal to the higher of the two fill pressures specified in the analysis parameters plus 2.0 psig.

Cause B: A pressure overrange occurred during an analysis because an error occurred in the pressure measurement electronics.

Action B: Call a Micromeritics Service Representative.

ANLSERR: Underrange
NN/ZZ cycles completed

Cause: A pressure underrange occurred during an analysis because an error occurred in the pressure measurement electronics.

Action: Call a Micromeritics Service Representative.

Automatic operation
has been canceled

Cause: The automatic operation has been canceled by the user.

Action: Wait for the termination process to complete or end the termination process by pressing **Alt + CLEAR** two more times.

CAL_ERR: Reset Pressure Cal. ?

Cause: The calibration information could not be read from the command or analysis module.

Action: Choose **Yes** and press **Enter** to reset the pressure and temperature calibration to nominal values. Resetting to nominal may restore normal readings but a proper calibration should be performed by a service technician. See the section *Reset Pressure Calibration* in the *System Commands* section.

Action: Choose **No** to avoid resetting the calibration. The instrument will be unresponsive.

CAL_ERR: Temperature
Calibration Failed

Cause: The temperature calibration was unsuccessful.

Action: Contact your service representative.

CAL1ERR: Eq failure
NN/ZZ cycles completed

Cause: The empty cell chamber failed to equilibrate in 1000 seconds during the first pass of calibration.

Action: Check the system for leaks (refer to **Checking the Cell and Expansion Chambers for Leaks** in Chapter 5).

CAL1ERR: Fill failure
NN/ZZ cycles completed

Cause: There was insufficient pressure to allow filling within five minutes during the first pass of calibration.

Action: Open the tank valves if shut, increase the regulator pressure or, if there is insufficient helium in the tank, obtain a new tank of helium. (Minimum recommended tank pressure is 200 psig.)

CAL1ERR: Overrange
NN/ZZ cycles completed

Cause: A pressure overrange occurred during the first pass of calibration because the regulator pressure is set too high.

Action: Adjust the pressure so that it is equal to the higher of the two fill pressures specified in the analysis parameters plus 2.0 psig.

Cause: A pressure overrange occurred during the first pass of calibration because an error occurred in the pressure measurement electronics.

Action: Call a Micromeritics Service Representative.

CAL1ERR: Underrange
NN/ZZ cycles completed

Cause: A pressure underrange occurred during the first pass of calibration because an error occurred in the pressure measurement electronics.

Action: Call a Micromeritics Service Representative.

CAL2ERR: Eq failure
NN/ZZ cycles completed

Cause: The calibration standard failed to equilibrate in 1000 seconds during the second pass of calibration.

Action: Check the system for leaks (refer to **Checking the Cell and Expansion Chambers for Leaks** in Chapter 5).

CAL2ERR: Fill failure
NN/ZZ cycles completed

Cause: There was insufficient pressure to allow filling within five minutes during the second pass of calibration.

Action: Open the tank valves if shut, increase the regulator pressure or, if there is insufficient helium in the tank, obtain a new tank of helium. (Minimum recommended tank pressure is 200 psig.)

CAL2ERR: Overrange
NN/ZZ cycles completed

Cause A: A pressure overrange occurred during the second pass of calibration because the regulator pressure is set too high.

Action A: Adjust the pressure so that it is equal to the higher of the two fill pressures specified in the analysis parameters plus 2.0 psig.

Cause B: A pressure overrange occurred during the second pass of calibration because an error occurred in the pressure measurement electronics.

Action B: Call a Micromeritics Service Representative.

CAL2ERR: Underrange
NN/ZZ cycles completed

Cause: A pressure underrange occurred during the second pass of calibration because an error occurred in the pressure measurement electronics.

Action: Call a Micromeritics Service Representative.

DATA_ERR: Chamber
volumes must be > 0

Cause: According to the calibration data, the cell volume or expansion volume for the selected insert is zero or a negative value.

Action: Perform the following steps:

1. Select **Set Up > Calibration Data**.
2. At the **Cell volume** prompt, enter the volume of the sample cell (or insert).
3. At the **Expansion volume** prompt, enter half of the sample cell volume.
4. Perform a volume calibration.

DATA_ERR:
No data to compute

Cause: An automatic operation was canceled before a complete cycle could be completed.

Action: Restart the automatic operation.

Cause: All the cycles have been excluded in review mode.

Action: Return to review mode and include some cycles.

DTA_WRN: Cal std
10% of full-scale

Cause A: You entered a value for the calibration standard that was less than 10% of the nominal cell chamber volume. Resulting data may be inaccurate.

Action A: Be sure you enter the value recorded on the Calibration Standard case.

Cause B: You used an inappropriate calibration standard for the nominal cell chamber.

Action B: Use a calibration standard of sufficient size (calibration standards are available from Micromeritics). The calibration standard should occupy at least 10% of the nominal cell chamber volume and the more nearly filled the cell is, the better the calibration.

DTA_WRN: Volume
10% of full-scale

Cause: There was not enough sample placed in the sample cup to give an accurate reading.

Action: Rerun the sample using enough material to occupy the maximum amount of the nominal cell chamber volume.

HW_ERR: Calibration
could not be read

Cause: The calibration information could not be read from the command or analysis module.

Action: Close the application and cycle power on the instrument. Contact your service representative if the problem persists.

MAN_ERR:
Pressure overrange

Cause: The fill valve was left open until the maximum system pressure was exceeded.

Action: Close the fill valve and open the vent and expansion valves. Allow the pressure to stabilize.

No A.C. Found

Cause: The control module cannot detect an analysis module.

Action: Contact your Micromeritics service representative.

No collected data to report,
or all cycles excluded

Cause: You requested a report in which there is either no data available or data have been excluded via review mode.

Action: Initiate an automatic operation or return to review mode and include at least one cycle.

Printer port
not responding

Cause: Your printer cable is not connected or the printer is not turned on.

Action: Check to make sure the printer is properly connected to the pycnometer, is turned on, and is on line.

Queuing print job
[ESCAPE] to cancel

Cause: Status message displayed when a report is being printed.

Action: None; this is a status message only.

Reset to factory defaults

Cause: The . (period) key was pressed at startup and the instrument was reset. Data files and HTML reports have been erased. Setup options have been returned to default values.

Action: Review setup options.

Sending line (line number) [ESCAPE] to cancel

Cause: Status message displayed when data are being transmitted.

Action: None; this is a status message only.

Transmission port not responding

Cause: The receiving device took longer than five seconds to acknowledge receipt of data from the pycnometer.

Action: Make sure the receiving device is properly connected to the pycnometer RS-232 port and is turned on. Verify that the serial I/O parameters controlling the receiving device correspond with the data transmission parameters in the set up mode.

Transmission port waiting for Xon

Cause: The receiving device stopped transmission by sending an Xoff, and hasn’t resumed the transmission by sending an Xon.

Action: None; when the receiving device is ready for more data, it should send the pycnometer an Xon.

SYS_ERR: Power Fail
NN/ZZ Cycles Completed

Cause: A power failure occurred and when power resumed, the automatic operation was canceled.

Action: Restart the automatic operation if desired.

TRN_ERR: Timeout
failed to respond

Cause: The receiving device took longer than 10 seconds to acknowledge receipt of data from the pycnometer.

Action: Make sure the receiving device is properly connected to the pycnometer RS-232 port and is turned on. Verify that the serial I/O parameters controlling the receiving device correspond with the data transmission parameters in the set up mode.

Updating Unit [n]
failed: Press [CLEAR]

Cause: One of the analysis modules has malfunctioned.

Action: Press **CLEAR** and follow the instructions displayed in the keypad window.

After disconnecting the faulty unit (as instructed), you may reconnect the control module with the remaining analysis module(s) and continue using your system.

USR_ERR: Cal std
10% of full-scale

Cause: You tried to enter a calibration standard volume that is less than 10% of the nominal full-scale volume.

Action: Enter a volume that represents at least 10% of the nominal cell chamber volume.

USR_ERR:
No data to review

Cause: You tried to review data for an automatic operation when there were no data to review.

Action: Abandon request.

USR_ERR: Number of
cycles must be = 5

Cause: You tried to enable run precision without increasing the number of runs to at least five.

Action: Increase the number of runs to five or abandon request.

USR_ERR: Out of range

Cause: You tried to enter a value that is out of the valid range.

Action: Enter a value in the specified range (refer to Chapter 4).

USR_ERR: Pressure overrange

Cause: A pressure overrange occurred but was left uncorrected.

Action: Return to manual mode and vent the system.

Valve failure
[ENTER] to retry.

Cause: One (or more) of the system valves failed to operate when the instrument was initialized.

Action: Press **ENTER** to retry. If still unsucessful, contact your service representative.

ZEROERR: Eq failure

Cause: The system failed to equilibrate within 1000 seconds.

Action: Check the pycnometer for leaks. Make sure the pycnometer has been placed in a draft-free environment.

ZEROERR: Overrange

Cause: A pressure overrange occurred while zeroing.

Action: Check for a fill valve leak. If there is none, contact a Micromeritics Service Representative.

ZEROERR: Underrange

Cause: An error occurred in the pressure measurement electronics while zeroing, causing a pressure underrange to occur.

Action: Call a Micromeritics Service Representative.

A.

B. CALCULATIONS

This appendix contains the calculations used in reports available in the AccuPyc program.

Calibration

Volume calibration uses the ultraprecise method of separate adjustments for the offset and scale factor.

Volume Offset

$$V_{cel} = V_{celprev} - V_{sampempty}$$

$-V_{sampempty}$ is reported as the offset in volume calibration reports.

Volume scale

$$V_{cel} = V_{celprev}\left(\frac{V_{calib}}{V_{sampball}}\right)$$

$$V_{exp} = V_{expprev}\left(\frac{V_{calib}}{V_{sampball}}\right)$$

$\left(\frac{V_{calib}}{V_{sampball}}\right)$ is reported as the scale factor in volume calibration reports.

where

V_{cel}	=	sample chamber volume
$V_{celprev}$	=	previously stored cell volume
$V_{sampempty}$	=	average V_{samp} from volume offset calibration analysis (no calibration ball)
V_{calib}	=	calibration ball volume
$V_{sampball}$	=	average V_{samp} from volume scale calibration analysis (with calibration ball)
V_{exp}	=	expansion chamber volume
$V_{expprev}$	=	previously stored expansion volume

Analysis

10-, 100-, and 350-cm^3 Units

$$V_{samp} = V_{cel} - \frac{V_{exp}}{\frac{P_1}{P_2} - 1}$$

$$D_{samp} = \frac{M_{samp}}{V_{samp}}$$

1-cm^3 Units and 2000-cm^3

$$V_{samp} = V_{cel} - V_{exp} \times \left(\frac{P_1}{P_2} - 1\right)$$

$$D_{samp} = \frac{M_{samp}}{V_{samp}}$$

where

V_{cel}	=	sample chamber volume
V_{exp}	=	expansion chamber volume
V_{samp}	=	sample volume
M_{samp}	=	sample mass
D_{samp}	=	sample density
P_1	=	gauge pressure after fill
P_2	=	gauge pressure after expansion

Run Precision

Run precision requires at least five runs. Run precision criterion is met when the sample volumes calculated for the four most recent previous runs fall within the specified error band for the current run's sample volume. The error band is a specified percentage of the nominal volume of the sample chamber (1, 10, 100, or 350 cm^3 and 2000 cm^3).

$V_{samp}[0]$ to $V_{samp}[4]$ are the five most recent sample volumes, $V_{samp}[4]$ being the most recent.

$$\text{ErrBand} = PctFullScale \times \frac{V_{nominal}}{100}$$

where

$V_{nominal}$ = nominal sample cell volume

If $(|V_{samp}[i] - V_{samp}[4]| \leq \text{ErrBand})$ for i = 0 to 3, run precision is achieved.

Total Pore Volume

$$\text{TotalPoreVol} = \frac{D_{samp} - D_{bulk}}{D_{samp} \times D_{bulk}}$$

where

D_{bulk} = entered bulk density

Total Solids Concentration

$$\text{WeightPctSolids} = 1 - \frac{D_{liq}}{D_{samp}} \times \frac{D_{sol}}{D_{sol} - D_{liq}} \times 100$$

where

D_{liq} = entered liquid density
D_{sol} = entered solid density

Geometric Volume and Active Area

Geometric volume of the sample is calculated based on the sample shape; for Method A, Active area is also calculated.

Cube

$$\text{GeomVol} = \text{EdgeLength}^3 \times \text{NumPieces}$$

$$\text{ActiveArea} = \text{EdgeLength}^2 \times (6 - \text{NumSkins}) \times \text{NumPieces}$$

Cylinder

$$\text{GeomVol} = \pi \times \frac{\text{Diam}^2}{4} \times \text{Height} \times \text{NumPieces}$$

$$\text{ActiveArea} = \left[\pi \times \text{Diam} \times \text{Height} + \frac{\pi}{4} \times \text{Diam}^2 \times (2 - \text{NumSkins})\right] \times \text{NumPieces}$$

Rectangle

$$\text{GeomVol} = \text{LongEdge} \times \text{ShortEdge} \times \text{RemainEdge} \times \text{NumPieces}$$

$$\begin{aligned}\text{ActiveArea} = [&(\text{LongEdge} \times \text{RemainEdge} \times (2 - \text{NumLargeSkins}) + \\ &\text{ShortEdge} \times \text{RemainEdge} \times (2 - \text{NumSmallSkins}) + \\ &\text{LongEdge} \times \text{ShortEdge} \times (2 - \text{NumRemainSkins})] \times \text{NumPieces}\end{aligned}$$

Resin Volume

$$\text{ResinVol} = \frac{M_{\text{SAMP}}}{\text{ResinDensity}}$$

$$\text{ResinVolPct} = \frac{\text{ResinVol}}{\text{GeomVol}} \times 100$$

where

M_{SAMP} = sample mass

Method A: Computed Open Cell Fraction

$$\text{OpenCellPct} = \frac{\text{GeomVol} - \text{V}_{\text{SAMP}} - \text{VolCellsCutOpen}}{\text{GeomVol}} \times 100$$

$$\text{ResinPlusClosedCellPct} = 100 - \text{OpenCellPct}$$

If cell measure is **Chord Length**;

$$\text{VolCellsCutOpen} = \text{ActiveArea} \times \frac{\text{ChordLength}}{1.14}$$

If cell measure is **Diameter**;

$$\text{VolCellsCutOpen} = \text{ActiveArea} \times \frac{\text{CellDiam}}{1.4515}$$

Method B: Measured Open Cell Fraction

$$\text{VolCellsCutOpen} = V_{\text{SAMP}}[1] - V_{\text{SAMP}}[2]$$

$$\text{ResinPlusClosedCellVol} = V_{\text{SAMP}}[1] + \text{VolCellsCutOpen}$$

$$\text{OpenCellVol} = \text{GeomVol} - \text{ResinPlusClosedCellVol}$$

$$\text{ResinPlusClosedCellPct} = \frac{\text{ResinPlusClosedCellVol}}{\text{GeomVol}} \times 100$$

$$\text{OpenCellPct} = \frac{\text{OpenCellVol}}{\text{GeomVol}} \times 100$$

where

$V_{\text{SAMP}}[1]$ = V_{SAMP} from the first analysis (before recutting)
$V_{\text{SAMP}}[2]$ = V_{SAMP} from the second analysis (after recutting)

Method C: Uncorrected Open Cell Fraction

$$\text{OpenCellVol} = \text{GeomVol} - V_{\text{SAMP}}$$

$$\text{OpenCellPct} = \frac{\text{OpenCellVol}}{\text{GeomVol}} \times 100$$

Method D: Compressibility Test

Quantities appended with [*i*] are for cycle *i*, where *i* goes from 1 up to the number of cycles.

$$\Delta V_{\text{P1}}[i] = \frac{V_{\text{SAMP}}[i-1] - V_{\text{SAMP}}[i]}{\text{P1}[i-1] - \text{P1}[i]}$$

$$\Delta V_{\text{P2}}[i] = \frac{V_{\text{SAMP}}[i-1] - V_{\text{SAMP}}[i]}{\text{P2}[i-1] - \text{P2}[i]}$$

$$\text{AvgVolChangeP1} = \text{avg}(\Delta V_{\text{P1}}[i]) \text{ for all included i}$$

$$\text{AvgVolChangeP2} = \text{avg}(\Delta V_{\text{P2}}[i]) \text{ for all included i}$$

$$\text{PctAvgVolChangeP1} = \frac{\text{AvgVolChangeP1}}{\text{GeomVol}} \times 100$$

$$\text{PctAvgVolChangeP2} = \frac{\text{AvgVolChangeP2}}{\text{GeomVol}} \times 100$$

Method E: Fracture Test

$$\Delta\mathrm{Vol} = V_{\mathrm{SAMP}}[3] - V_{\mathrm{SAMP}}[1]$$

$$\mathrm{PctFracturedCells} = \frac{\Delta\mathrm{Vol}}{\mathrm{GeomVol}} \times 100$$

where

$V_{SAMP}[1]$ = V_{SAMP} for the first (prefracture) cycle
$V_{SAMP}[3]$ = V_{SAMP} for the third (postfracture) cycle

C. THEORY

This appendix provides theoretical information on the analysis function for the AccuPyc.

10-, 100-, and 350-cm³ Units

The AccuPyc is a gas displacement pycnometer which measures the volume of solid objects of irregular or regular shape whether powdered or in one piece. A greatly simplified diagram of the instrument is shown below.

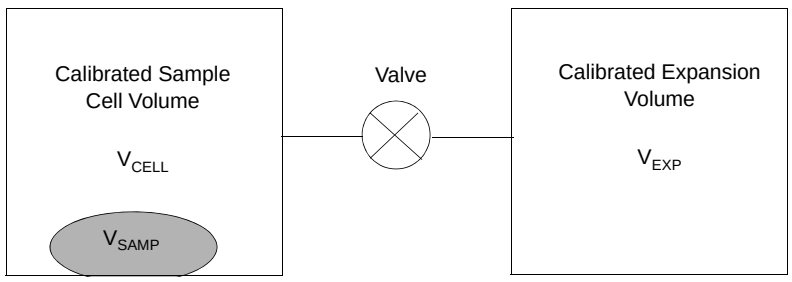

Assume that both V_{CELL} and V_{EXP} are at ambient pressure P_a, are at ambient temperature T_a, and that the valve is then closed. V_{CELL} is then charged to an elevated pressure P_1. The mass balance equation across the sample cell, V_{CELL}, is

$$P_1\ (V_{CELL} - V_{SAMP}) = n_C R T_a \qquad (1)$$

where

n_C = the number of moles of gas in the sample cell
R = the gas constant
T_a = the ambient temperature

The mass equation for the expansion volume is

$$P_a\ V_{EXP} = n_E R T_a \qquad (2)$$

where

P_a = ambient pressure
n_E = the number of moles of gas in the expansion volume

When the valve is opened, the pressure falls to an intermediate value, P_2, and the mass balance equation becomes

$$P_2\ (V_{CELL} - V_{SAMP} + V_{EXP}) = n_c R T_a + n_E R T_a \qquad (3)$$

Substituting from equations (1) and (2) into (3):

$$P_2\ (V_{\mathrm{CELL}} - V_{\mathrm{SAMP}} + V_{\mathrm{EXP}}) = P_1\ (V_{\mathrm{CELL}} - V_{\mathrm{SAMP}}) + P_a V_{\mathrm{EXP}} \tag{4}$$

or

$$(P_2 - P_1)(V_{\mathrm{CELL}} - V_{\mathrm{SAMP}}) = (P_a - P_2)V_{\mathrm{EXP}} \tag{5}$$

then

$$V_{\mathrm{CELL}} - V_{\mathrm{SAMP}} = \frac{P_a - P_2}{P_2 - P_1}\ V_{\mathrm{EXP}} \tag{6}$$

Adding and subtracting P_a in the denominator and rearranging gives

$$-V_{\mathrm{SAMP}} = -V_{\mathrm{CELL}} + \frac{P_a - P_2}{P_2 - P_a - P_1 + P_a}\ V_{\mathrm{EXP}} \tag{7}$$

Dividing by (P_a - P_2) in both the numerator and denominator

$$V_{\mathrm{SAMP}} = V_{\mathrm{CELL}} - \frac{V_{EXP}}{-1-\left(\frac{P_1 - P_a}{P_a - P_2}\right)} \tag{8}$$

or

$$V_{\mathrm{SAMP}} = V_{\mathrm{CELL}} - \frac{V_{EXP}}{\left(\frac{P_1 - P_a}{P_2 - P_a}\right) - 1} \tag{9}$$

Since P_1, P_2, and P_a are expressed in equations (1) through (9) as absolute pressures and equation (9) is arranged so that P_a is subtracted from both P_1 and P_2 before use, new P_{1g} and P_{2g} may be redefined as gauge pressures

$$P_{1g} = P_1 - P_a \tag{10}$$

$$P_{2g} = P_2 - P_a \tag{11}$$

and equation (9) rewritten as

$$V_{\mathrm{SAMP}} = V_{\mathrm{CELL}} - \frac{V_{\mathrm{EXP}}}{\frac{P_{1g}}{P_{2g}} - 1} \tag{12}$$

Equation (12) then becomes the working equation for the pycnometer. Calibration procedures are provided to determine V_{CELL} and V_{EXP} and the pressures are measured by a gauge pressure transducer. Provisions are made for conveniently charging and discharging gases at controlled rates, for optimizing the relative sizes of the sample chambers and expansion volumes, and for cleansing the samples of vapors.

1-cm³ and 2000-cm³ Units

The 1-cm³ and 2000-cm³ pycnometer operate by filling the expansion chamber while the sample cell remains at ambient pressure. After P_1 is equilibrated, the expansion valve opens to allow gas to expand into the sample chamber and P_2 is equilibrated.

For the 1-cm³ pycnometer, equation (1) becomes

$$P_1 \; V_{\mathrm{EXP}} = n_E R T_a$$

and equation (2) becomes

$$P_a(V_{\mathrm{CELL}} - V_{\mathrm{SAMP}}) = n_C R T_a$$

A derivation similar to that above yields the working equation for the 1-cm³ pycnometer.

$$V_{\mathrm{SAMP}} = V_{\mathrm{CELL}} - \mathrm{V}_{\mathrm{EXP}}\left(\frac{P_{1g}}{P_{2g}} - 1\right)$$

D. TRANSMITTED DATA

Analysis and calibration data can be transmitted in a single-column or spreadsheet format. The data are in ASCII-delimited format. Spreadsheet format is suitable for direct import into many popular spreadsheets (using serial communication software). The following tables define the formats.

In all tables, units are as follows:

Date	DD/MM/YY
Time	HH:MM:SS
Pressure	psig
Temperature	ºC
Elapsed Time	seconds

Analysis Report

Tables D-1 and D-2 provide the formats for FoamPyc methods. Refer to Tables D-3 and D-4 for the format for the Standard method.

FoamPyc Methods

Table D-1. FoamPyc Methods Analysis Report - Single Column

Record Number	Information Conveyed	Form
1	Version number	20 characters
2	Serial number	1 integer
3	Report type = analysis	8 characters
4	Method type = A, B, C, D, or E	
5	Start	
5a	Date	8 characters
5b	Time	8 characters
6	Stop	
6a	Date	8 characters
6b	Time	8 characters
7	Temperature	1 floating point
8	Description line 1	20 characters
9	Description line 2	20 characters
10	Sample ID	20 characters
11	Sample mass	1 floating point

Record Number	Information Conveyed	Form
12	Number of purges	1 integer
13	Equilibration rate	1 floating point
14	Cell volume	1 floating point
15	Expansion volume	1 floating point
16	Resin density	1 floating point
17	Geometric volume	1 floating point
18	Average volume (Methods A, B, and C) Average volume change per unit increase of P1 (Method D) Volume change between phases 1 and 3 (Method E)	1 floating point
19	Volume standard deviation (Methods A, B, and C) Average volume change per unit increase of P2 (Method D) Percent change in volume between phases 1 and 3 (Method E)	1 floating point
20	Recut average volume (Method B) 0.0 (Methods A, C, D, and E)	1 floating point
21	Recut standard deviation (Method B) 0.0 (Methods A, C, D, and E)	1 floating point
22	Open cell percentage (Methods A, B, and C) 0.0 (Methods D and E)	1 floating point
23	Number of cycles	1 integer
24	Run precision 0 = Disabled 1 = Enabled	1 integer
25	Percent full scale	1 floating point
26	P1 (all P1 data)	1 floating point
27	P2 (all P2 data)	1 floating point
28	Included in average calculation (all included data) 0 = Excluded 1 = Included	1 integer
29	Elapsed time (all elapsed time data)	1 unsigned integer
30	Temperature (all temperature data)	1 floating point
Method B only		
31	Number of cycles	1 integer
32	P1 (all P1 data)	1 floating point
33	P2 (all P2 data)	1 floating point
34	Included in average calculation (all included data) 0 = Excluded 1 = Included	1 integer
35	Elapsed time (all elapsed time data)	1 unsigned integer
36	Temperature (all temperature data)	1 floating point

Table D-2. FoamPyc Methods Analysis Report - Spreadsheet

Record Number	Information Conveyed	Form
1	Version number	20 characters
2	Serial number	1 integer
3	Report type = calibration	11 characters
4	Method type (A, B, C, D, or E)	
5	Start (reported on one line as ASCII comma-delimited data)	
5a	Date	8 characters
5b	Time	8 characters
6	Stop (reported on one line as ASCII comma-delimited data)	
6a	Date	8 characters
6b	Time	8 characters
7	Temperature	1 floating point
8	Description line 1	20 characters
9	Description line 2	20 characters
10	Sample ID	20 characters
11	Sample mass	1 floating point
12	Number of purges	1 integer
13	Equilibration rate	1 floating point
14	Cell volume	1 floating point
15	Expansion volume	1 floating point
16	Resin density	1 floating point
17	Geometric volume	
18	Average volume (Methods A, B, and C) Average volume change per unit increase of P1 (Method D) Volume change between phases 1 and 3 (Method E)	1 floating point
19	Volume standard deviation (Methods A, B, and C) Average volume change per unit increase of P2 (Method D) Percent change in volume between phases 1 and 3 (Method E)	1 floating point
20	Recut average volume (Method B) 0.0 (Methods A, C, D, and E)	1 floating point
21	Recut standard deviation (Method B) 0.0 (Methods A, C, D, and E)	1 floating point
22	Open cell percentage (Methods A, B, and C) 0.0 (Methods D and E)	1 floating point
23	Number of cycles	1 integer

Record Number	Information Conveyed	Form
24	Run precision 0 = Disabled 1 = Enabled	1 integer
25	Percent full scale	1 floating point
26	Carriage return/line feed	
27	Carriage return/line feed	
28	Carriage return/line feed	
29	Cycle number and pressure (reported on one line as ASCII comma-delimited data)	
29a	Cycle number	1 integer
29b	P1	1 floating point
29c	P2	1 floating point
29d	Included in average calculation 0 = Excluded 1 = Included	1 integer
29e	Elapsed time	1 unsigned integer
29f	Volume	1 floating point
29g	Volume deviation	1 floating point
30	Temperature (all temperature data)	1 floating point
Method B only		
31	Number of cycles	1 integer
32	Carriage return/line feed	
33	Carriage return/line feed	
34	Carriage return/line feed	
35	Run number and pressure (reported on one line as ASCII comma-delimited data)	
35a	Cycle number	1 integer
35b	P1	1 floating point
35c	P2	1 floating point
35d	Included in average calculation 0 = Excluded 1 = Included	1 integer
35e	Elapsed time	1 unsigned integer
35f	Volume	1 floating point
35g	Volume deviation	1 floating point
36	Temperature (all temperature data)	1 floating point

Standard Method

Table D-3. Standard Method Analysis Report - Single Column

Record Number	Information Conveyed	Form
1	Version number	20 characters
2	Serial number	1 integer
3	Report type = analysis	8 characters
4	Start	
4a	Date	8 characters
4b	Time	8 characters
5	Stop	
5a	Date	8 characters
5b	Time	8 characters
6	Ending temperature	1 floating point
7	Description line 1	20 characters
8	Description line 2	20 characters
9	Sample ID	20 characters
10	Sample mass	1 floating point
11	Number of purges	1 integer
12	Equilibration rate	1 floating point
13	Cell volume	1 floating point
14	Expansion volume	1 floating point
15	Average volume	1 floating point
16	Volume standard deviation	1 floating point
17	Average density	1 floating point
18	Density standard deviation	1 floating point
19	Number of runs	1 integer
20	Run precision 0 = Disabled 1 = Enabled	1 integer
21	Percent full scale	1 floating point
22	P1 (all P1 data)	1 floating point
23	P2 (all P2 data)	1 floating point
24	Included in average calculation (all included data) 0 = Excluded 1 = Included	1 integer
25	Elapsed time (all elapsed time data)	1 unsigned integer
26	Temperature (all temperature data)	1 floating point

Table D-4. Standard Method Analysis Report - Spreadsheet

Record Number	Information Conveyed	Form
1	Version number	20 characters
2	Serial number	1 integer
3	Report type = calibration	11 characters
4	Start (reported on one line as ASCII comma-delimited data)	
4a	Date	8 characters
4b	Time	8 characters
5	Stop (reported on one line as ASCII comma-delimited data)	
5a	Date	8 characters
5b	Time	8 characters
6	Temperature	1 floating point
7	Description line 1	20 characters
8	Description line 2	20 characters
9	Sample ID	20 characters
10	Sample mass	1 floating point
11	Number of purges	1 integer
12	Equilibration rate	1 floating point
13	Cell volume	1 floating point
14	Expansion volume	1 floating point
15	Average volume	1 floating point
16	Volume standard deviation	1 floating point
17	Average density	1 floating point
18	Density standard deviation	1 floating point
19	Number of runs	1 integer
20	Run precision 0 = Disabled 1 = Enabled	1 integer
21	Percent full scale	1 floating point
22	Carriage return/line feed	
23	Carriage return/line feed	
24	Carriage return/line feed	
25	Run number and pressure (reported on one line as ASCII comma-delimited data)	
25a	Run number	1 integer
25b	P1	1 floating point
25c	P2	1 floating point

Record Number	Information Conveyed	Form
25d	Included in average calculation 0 = Excluded 1 = Included	1 integer
25e	Elapsed time	1 unsigned integer
25f	Volume	1 floating point
25g	Volume deviation	1 floating point
25h	Density	1 floating point
25i	Density deviation	1 floating point
26	Temperature (all temperature data)	1 floating point

Calibration Report

Table D-5. Calibration Report - Single Column

Record Number	Information Conveyed	Form
1	Version number	20 characters
2	Serial number	1 integer
3	Report type = calibration	11 characters
4	Start	
4a	Date	8 characters
4b	Time	8 characters
5	Stop	
5a	Date	8 characters
5b	Time	8 characters
6	Temperature	1 floating point
7	Calibration standard size	1 floating point
8	Number of purges	1 integer
9	Equilibration rate	1 floating point
10	Chamber insert 0 = None 1 = 10 cm^3 (100-cm^3 unit) 1 cm^3 (10-cm^3 unit) 0.1 cm^3 (1-cm^3 unit) 2 = 35 cm^3 (100-cm^3 unit) 3.5 cm^3 (10-cm^3 unit)	1 integer
11	Average cell volume	1 floating point
12	Cell volume standard deviation	1 floating point
13	Average expansion volume	1 floating point
14	Expansion volume standard deviation	1 floating point
15	Number of runs	1 integer
16	P1 (all P1 data)	1 floating point
17	P2 (all P2 data)	1 floating point
18	P1* (all P1* data)	1 floating point
19	P2* (all P2* data)	1 floating point
20	Included in average calculation (all included data) 0 = Excluded 1 = Included	1 integer

Table D-6. Calibration Report - Spreadsheet

Record Number	Information Conveyed	Form
1	Version number	20 characters
2	Serial number	1 integer
3	Report type = calibration	11 characters
4	Start (reported on one line as ASCII comma-delimited data)	
4a	Date	8 characters
4b	Time	8 characters
5	Stop (reported on one line as ASCII comma-delimited data)	
5a	Date	8 characters
5b	Time	8 characters
6	Temperature	1 floating point
7	Calibration standard size	1 floating point
8	Number of purges	1 integer
9	Equilibration rate	1 floating point
10	Chamber insert 0 = None 1 = 10 cm^3 (100-cm^3 unit) 1 cm^3 (10-cm^3 unit) 0.1 cm^3 (1-cm^3 unit) 2 = 35 cm^3 (100-cm^3 unit) 3.5 cm^3 (10-cm^3 unit)	1 integer
11	Average cell volume	1 floating point
12	Cell volume standard deviation	1 floating point
13	Average expansion volume	1 floating point
14	Expansion volume standard deviation	1 floating point
15	Number of runs	1 integer
16	Carriage return/line feed	
17	Carriage return/line feed	
18	Carriage return/line feed	
19	Run number and pressure (reported on one line as ASCII comma-delimited data)	
19a	Run number	1 integer
19b	P1	1 floating point
19c	P2	1 floating point
19d	P1*	1 floating point
19e	P2*	1 floating point

Record Number	Information Conveyed	Form
19f	Included in average calculation 0 = Excluded 1 = Included	1 integer
19g	Cell volume	1 floating point
19h	Cell volume deviation	1 floating point
19i	Expansion volume	1 floating point
19j	Expansion volume deviation	1 floating point

E. MULTIPLE ANALYSIS MODULES

This Appendix provides information on attaching multiple analysis modules to a control module. You can have up to six analysis modules for one control module. In most cases, a control module also contains an analysis module in a single unit. Some systems are available only as a control module and analysis module (two units); for example, the 350-cm^3 system and the Glove Box system.

Connecting Modules to a Single Unit System

Additional analysis modules enable you to increase productivity and/or provide means for analyzing different size samples concurrently. For example, you may wish to attach an additional 10-cm^3 analysis module to an existing 10-cm^3 system, or a 100-cm^3 analysis module to an existing 10-cm^3 system.

To attach an additional analysis module to an existing single-unit system (controller and analysis modules combined):

Attach an Analysis module to a Control module as follows:

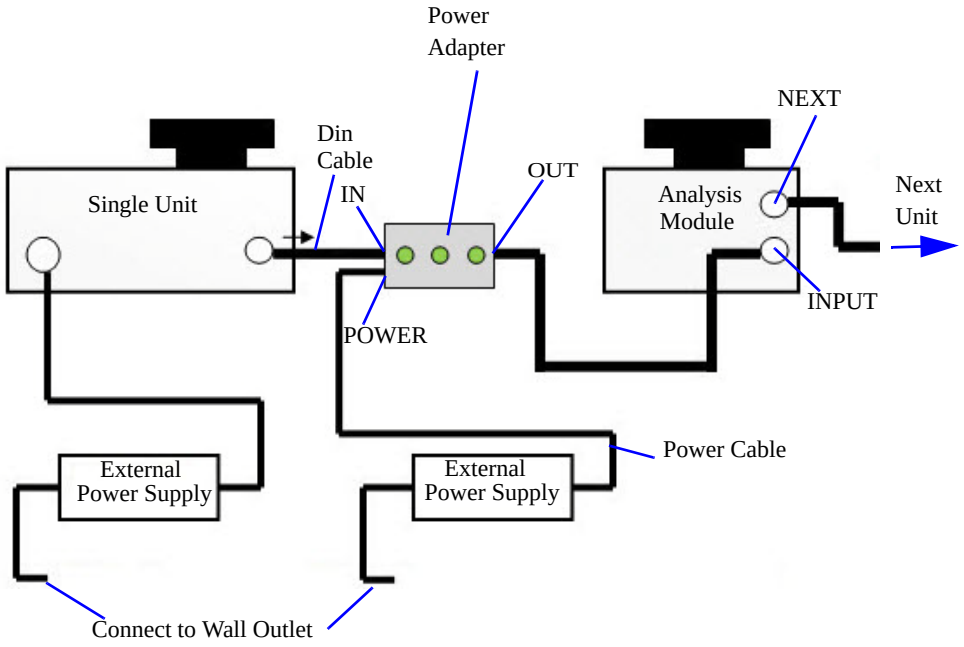

1. Place the On/Off switch on the rear panel of the analyzer in the Off (O) position.

If you have the Windows version of the AccuPyc, exit the application before turning off the analyzer.

2. Connect one external power supply cable to the back of the single unit system and another external power supply cable to each power adapter to be used to connect the analysis modules.

3. Connect a power cable to each external power supply.

4. Attach one end of the din cable (provided in the analysis module accessories kit) to the connector labeled **Module Connection** on the rear panel of the single-unit system.

5. Attach the other end of the din cable to the separate power adapter.

6. Attach the hardwired power adapter cable to the lower connector labeled **Module Connection** on the rear panel of the analysis module. Be sure to use the lower connector on the analysis module; the upper connector is for attaching another analysis module.

7. Plug the external power supply cables into electrical wall outlets.

8. Place the On/Off switch on the rear panel of the analyzer in the On (|) position.

9. Press **Alt + CHOICE + 2** to access the second Analysis module; **Unit2** should display in the upper left corner of the display:

```
Unit2      SN1234    10 cm3
           X - X - X
Reload
P = (pressure)
```

If you have the Windows version of the AccuPyc, Unit menus are added to the menu bar for each analysis module you attach.

10. Calibrate the Analysis module using the Calibration Kit shipped with the module. Refer to **Calibrating the Pycnometer** in Chapter 2 for step-by-step instructions.

Connecting One or More Analysis Modules to a Controller

Some models of the AccuPyc require a Control module and an Analysis module as separate units. For example, the Glove box system and the 350-cm^3 system. A Control module contains a keypad and a display, but does not contain a sample compartment.

Attach an Analysis module to a Control module as follows:

:

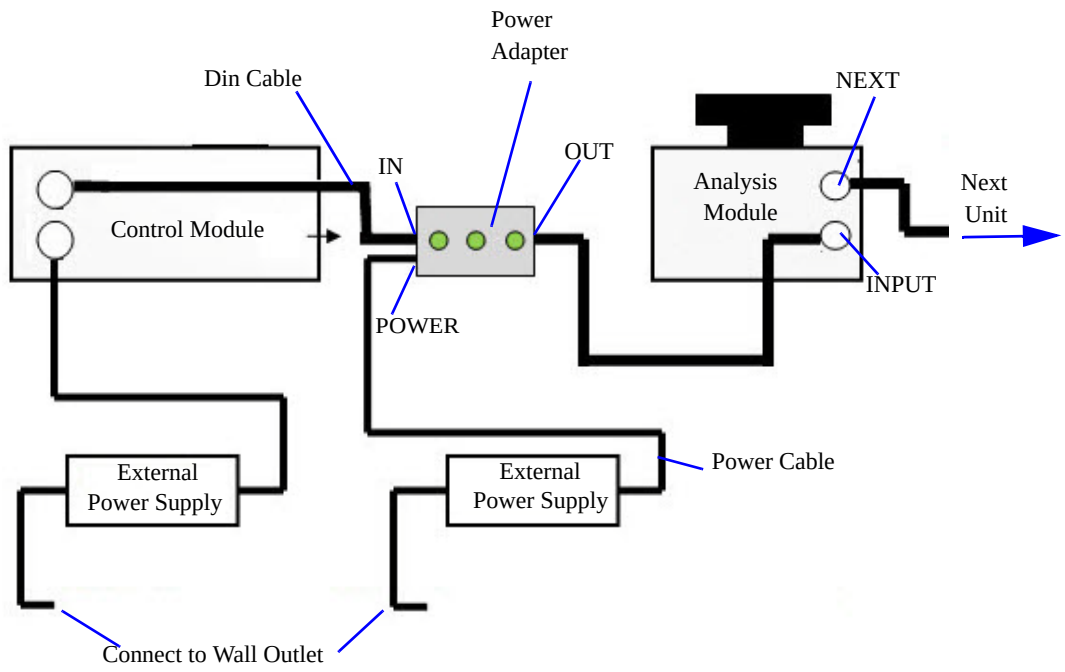

1. Place the On/Off switch on the rear panel of the analyzer in the Off (O) position.

If you have the Windows version of the AccuPyc, exit the application before turning off the analyzer.

2. Locate the power adapter (in the analysis module kit) and connect external power supply cable to each power adapter to be used to connect the analysis modules below the din connector on the power adapter.

3. Connect a power cable to each external power supply.

4. Attach one end of the din cable (provided in the control module accessories kit) to the connector labeled **Module Connection** on the rear panel of the single-unit system.

5. Attach the other end of the din cable to the separate power adapter.

6. Attach the hardwired power adapter cable to the lower connector labeled **Module Connection** on the rear panel of the analysis module. Be sure to use the lower connector on the analysis module; the upper connector is for attaching another analysis module.

7. Plug the external power supply cables into electrical wall outlets.

8. Place the On/Off switch on the rear panel of the analyzer in the On (|) position.

9. Calibrate the Analysis module using the Calibration Kit shipped with your system. Refer to **Calibrating the Pycnometer** in Chapter 2 for step-by-step instructions.

F. TEMPERATURE-CONTROLLED ACCUPYC

If you have a temperature-controlled AccuPyc, you must attach a circulating bath (not provided by Micromeritics). This appendix provides information on attaching the bath, but it does not provide operating instructions for the bath (refer to the manufacturer's operator's manual for operating instructions). Basic operating instructions are the same for the temperature-controlled AccuPyc as for other AccuPycs.

Attaching a Circulating Bath

The rear panel of the temperature-controlled AccuPyc contains connections for a circulating bath; all other connections are common to all AccuPycs.

1. Be sure the controlling unit is turned off.

2. Remove the plugs from the ports labeled with arrows; the left port is the "In" port and the right one is the "Out" port.

3. Insert a hose fitting (provided in the accessory kit) into each connector.

4. Cut the piece of 4-ft. tubing (also included in the accessory kit) into two equal pieces; 2 ft each.

5. Install the tubing on the In and Out connectors.

6. Install the other end of the Out tubing to the "Inlet" connection of the bath circulator.

7. Install the other end of the In tubing to the "Outlet" connection of the bath circulator.

8. Set the temperature using the appropriate controls on the bath circulator. Refer to the manufacturer's manual for operating instructions.

9. Return to the appropriate section in the operator's manual to continue installation.

Adding an Analysis Module

Use these instructions when adding an Analysis module to an existing Temperature-controlled unit.

1. Be sure the controlling unit is turned off.

If you have the Windows version of the AccuPyc, exit the application before turning off the analyzer.

2. Connect the circulating bath as instructed in the previous section.

3. Attach one end of the module connector cable (provided in the analysis module accessories kit) to the connector labeled **Module Connection** on the rear panel of the single-unit system.

4. Attach the other end of the module connector cable to the lower connector labeled Module Connector on the rear panel of the analysis module

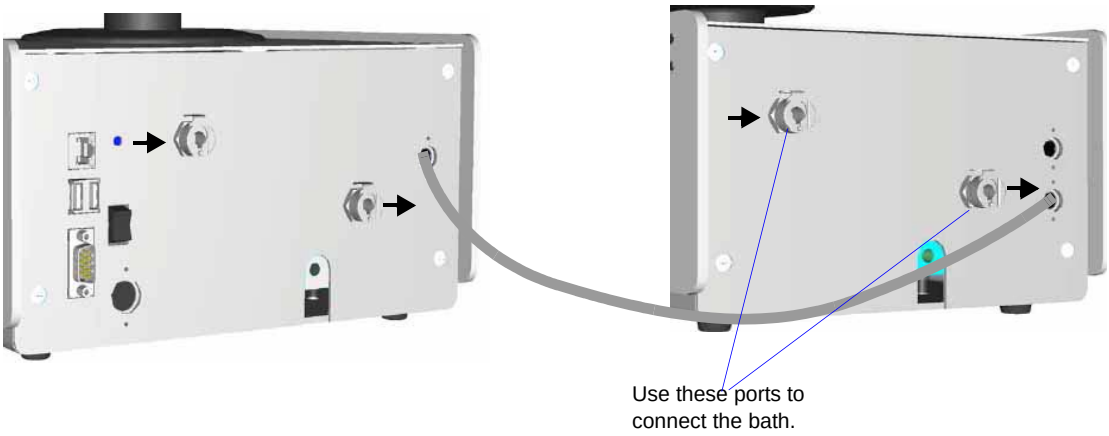

Be sure to use the lower connector on the analysis module; the upper connector is for attaching another analysis module.

5. Place the On/Off switch on the rear panel of the analyzer in the On (|) position.

6. Calibrate the Analysis module using the Calibration Kit shipped with your system. Refer to **Calibrating the Pycnometer** in Chapter 2 for step-by-step instructions.

G. SUPPORTED PRINTERS

The AccuPyc provides support for a USB printer and includes the following printer drivers:

- Canon Bubble Jet
- Epson ESCP
- Epson ESCP Raster
- Epson ESCP2
- HP PCL 3
- HP PCL 6XL
- Postscript

Printers capable of interface with the Gemini analyzer:

- must be USB 2.00 (or newer)
- must have a printer language supported by one of the printer drivers listed above
- cannot be host-based

Printers that do not meet these criteria will not interface properly with the analyzer. Refer to your printer manufacturer's user manual if you encounter problems.

The printer driver is selected using **Set Up > Report Options**. Press **ENTER** until the **Printer?** prompt is displayed, then **CHOICE** until the appropriate printer driver is displayed.

H. RS-232 PIN ASSIGNMENT

The AccuPyc is a standard DTE device. The RS-232 port on the rear panel of the AccuPyc can be used to attach an analytical balance for transfer of sample weight, or for transmitting data through a serial line to a computer.

The pin assignment for the RS-232 port is shown in the following table; be sure your receiving device is configured to interface with these assignments. Any signals that are not listed in the table will be ignored by the AccuPyc.

Pin	Signal	Description	Data Direction
2	RXD	Receive data	Into AccuPyc
3	TXD	Transmit data	From AccuPyc
4	DTR	Data terminal ready	From AccuPyc
5	GND	Ground	—
6	DSR	Data set ready	Into AccuPyc

The AccuPyc uses the DTR and DSR signals for hardware flow control. Be sure that your serial device provides these signals. For example; if attaching to a PC (also a DTE device), use a null modem cable which includes the signals designated in the above table.

If you experience a problem with transmission, ensure that the signals are set up properly. If the signals are correctly configured, contact the receiving device manufacturer for assistance.

I. KEYBOARD INTERFACE

A computer keyboard attached to the USB port enables you to enter alphanumeric characters at certain prompts; for example, the **Sample ID** and **Description** prompts. So that you do not have to switch back and forth between the computer keyboard and the analyzer keypad, all system commands are available through the keyboard. Tables I-1 and I-2 provide computer keyboard equivalents for the functions on the analyzer keypad.

Table I-1. Alternate Functions

Function	Key Sequence		Used To
	Keypad	Keyboard	
Analyze	**Alt** + **4**	**Ctrl + A**	Perform an analysis.
Calibrate	**Alt** + **.** (decimal)	**Ctrl + O**	Calibrate the pycnometer.
Escape	**Alt** + **CLEAR**	**Esc**	Discard all data entered in the current mode and return to display mode. Cancel an automatic operation in progress. Exit manual mode.
Manual	**Alt** + **1**	**Ctrl + Y**	Enables manual mode, allowing you to open and close the **Fill** (Key 7), **Expand** (Key 8), and **Vent** (Key 9) valves. The state of the valve is shown on the second line of the display, where X = closed and O = open. Press **Alt + CLEAR** to exit manual mode and return to the **Reload** prompt.
Print	**Alt** + **6**	**Ctrl + P**	Print an analysis or calibration report. If an automatic operation is in progress, print a partial report.
Review	**Alt** + **5**	**Ctrl + R**	Review completed analysis or calibration data.
Set Up	**Alt** + **2**	**Ctrl + U**	Display or edit analysis parameters, report options, calibration data, data transmission parameters, unit types, operating language, and date and time.

***Table I-1. Alternate Functions** (continued)*

Function	Key Sequence		Used To
	Keypad	Keyboard	
Transmit	**Alt** + **3**	**Ctrl + T**	Transmit analysis or calibration data over the serial line. Transmit a partial report if an automatic operation is in progress.
Unit	**Alt** + **CHOICE** + **[unit number**	**N/A**	Select the unit you wish to use (when multiple analysis modules are attached). You must use the analyzer keypad for this function.
Zero	**Alt** + **0**	**Ctrl + Z**	Zero the pressure transducer.

Table I-2. Standard Key Functions

Keypad	Keyboard	Used To
CHOICE	**Ctrl + N**	Display the next message when in display mode. Display the next multiple choice item when in a command mode.
CLEAR	**Ctrl + X**	Clear a message when in display mode. Clear an entry when in a command mode.
ENTER	**Enter or Ctrl + M**	Complete an entry or begin an action
SAVE	**Ctrl + W**	Save the information you entered and return to display mode.

J. MULTIVOLUME INSERTS

The MultiVolume Insert option enables you to analyze samples using smaller-sized sample chambers with your AccuPyc. MultiVolume Inserts are available as follows:

- **AccuPyc 2000-cm^3 capacity**; includes 650- and 1300 cm^3 cups, supporting inserts and calibration standards. A tool is also included to allow removal of the supporting inserts.
- **AccuPyc 100-cm^3 capacity**; includes 10- and 35-cm^3 inserts with corresponding sample cups and appropriate calibration standards. A fritted filter lid, which prevents the escape of sample particles under rapid gas flow, is included for the 10-cm^3 insert.
- **AccuPyc 10-cm^3 capacity**; includes 1- and 3.5-cm^3 inserts with corresponding sample cups and appropriate calibration standards. Fritted filter lids are included for both inserts.
- **AccuPyc 1-cm^3 capacity**; includes a 0.1-cm^3 insert/sample cup combination.

Refer to **Ordering Information** for the appropriate part number and ordering information.

Operating Parameters

Operating procedures using inserts typically are the same as when not using them. However, you do have to request that a prompt display during the procedures allowing you to choose the MultiVolume insert you are using. Perform the following steps to have a **Chamber Insert** prompt display during standard operations.

1. Press **Alt + 2** to access the **Set Up** function.
2. Press **CHOICE** until **Report Options** is displayed, then press **ENTER**.
3. Continue pressing **Enter** until the **Request Insert** prompt is displayed.
4. Press **CHOICE** until **Yes** is displayed, then press **ENTER**.

```
Unit[n]     SN1234     10 cm3
Report Options
Request insert?
Yes
```

5. Press **SAVE** to save the change(s) and return to the **Reload** prompt.

A **Chamber Insert** prompt will display during all normal operating procedures, allowing you to choose the appropriate insert. For example, a **Chamber Insert** prompt will display when starting a calibration or analysis.

Installing and Removing Inserts and Sample Cups

Wear latex gloves when handling inserts and sample cups. Oils from your skin may contaminate the surface and affect analysis results. Refer to *Handling System Components* in Chapter 2 for recommendations on handling system components.

An insert changes the size of the sample chamber and, therefore, requires its own sample cup. All inserts are shipped with appropriate cups, with the exception of the 0.1-cm^3 insert for the 1-cm^3 unit. Because of its size, the sample cup for the 0.1-cm^3 insert is built-in. The appearance of the inserts and cups varies; this example shows a 10-cm^3 cup and insert.

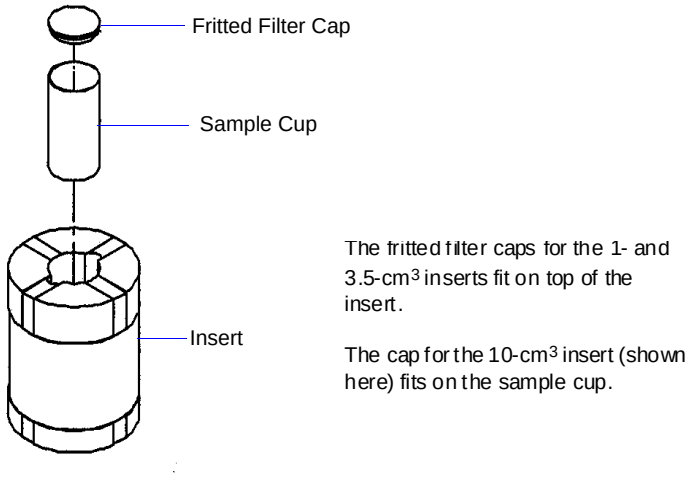

The inserts for the 2000 cm^3 systems are installed and removed with a special tool.

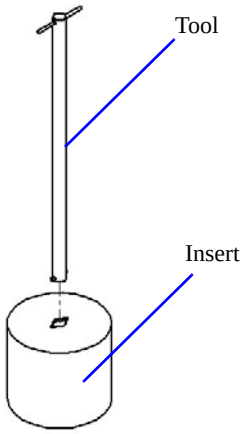

10-, 3.5-, and 35-cm^3 Inserts

Simply remove the chamber cap and place the insert into the sample chamber. The insert should fit snugly in the chamber. Place the appropriate sample cup into the well of the insert.

Do not force the insert or cup into the openings; the instrument, insert, or cup may be damaged.

Be sure to install the fritted filter cap (if used) before closing the sample chamber. A fritted filter cap is used to constrict gas flow, and is included with some inserts. The fritted filter cap for the 10-cm^3 insert fits on the top of the sample cup. The fritted filter caps for the 1- and 3.5-cm^3 inserts fit on the top of the insert. Fritted filter caps are not available for the 0.1- and 35-cm^3 inserts.

1- and 0.1-cm^3 Inserts

Special tools are required for installing the 1- and 0.1-cm^3 inserts; these tools are included in the appropriate MultiVolume kits.

1-cm^3 Insert and Sample Cup

Perform the following steps to install the 1-cm^3 insert and sample cup:

1. Remove the sample chamber cap and place on a clean work surface with the greased side facing upward. The cell chamber cap should be left off the sample chamber a minimal amount of time to prevent contamination from airborne particles.

2. Place the insert into the sample chamber.

3. Use the handling tool to grasp the cup for placement in the insert. After placing the sample into the sample cup, insert the tip of the tool into the cup and press down firmly. The handling tool features an O-ring to grip the inside surface of the sample cup.

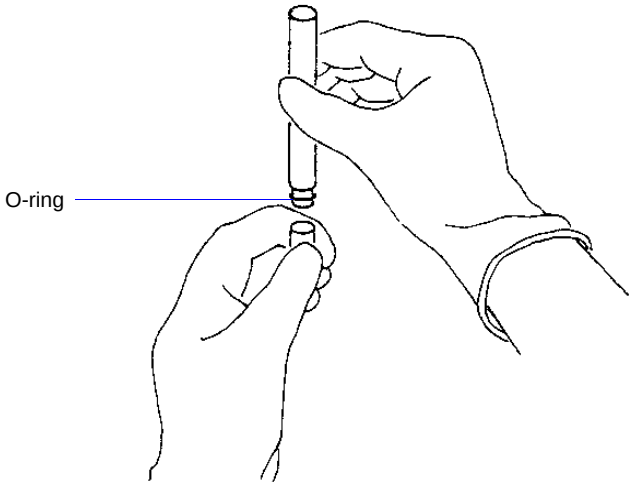

4. Place the cup into the insert, then tilt the tool to one side to remove it from the sample cup.

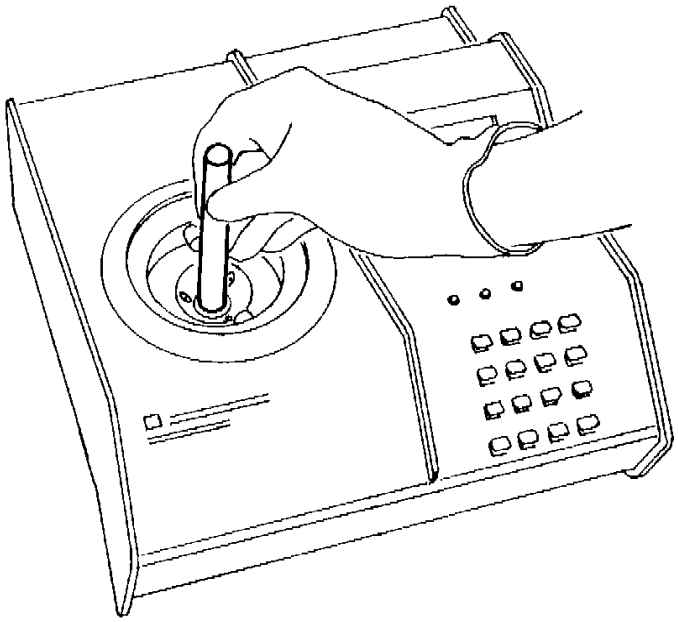

5. If using a fritted filter cap, place it onto the top of the insert.

6. Replace the sample chamber cap.

After the operation is complete, perform the following steps to remove the sample cup and insert:

1. Remove the sample chamber cap and place on a clean work surface with the greased side facing upward.

2. Remove the fritted filter cap (if used).

3. Insert the handling tool into the sample cup so that it is gripped by the O-ring.

4. Lift the sample cup out of the insert.

5. Use your fingers to pull the insert from the sample chamber.

6. Replace the sample chamber cap.

0.1-cm^3 Insert

The 0.1-cm^3 insert does not have a separate sample cup. Because of its size, the sample cup is built into the insert.

Perform the following steps to install and remove the 0.1-cm^3 insert/sample cup:

1. Remove the sample chamber cap and place on a clean work surface with the greased side facing upward. The cell chamber cap should be left off the sample chamber a minimal amount of time to prevent contamination from airborne particles.

2. After placing the sample into the insert/sample cup, insert the tips of the pliers into the two small holes on the upper surface of the insert.

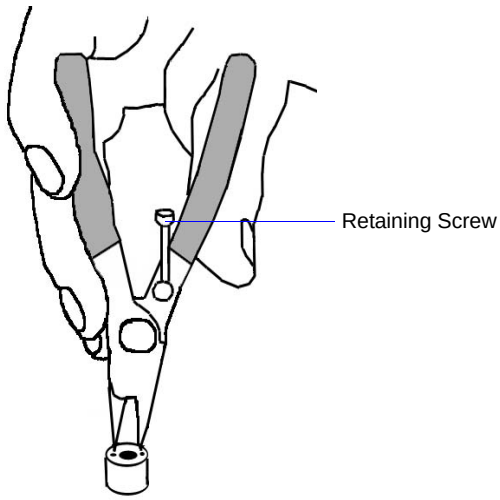

The pliers feature a retaining screw, allowing you to lock the pliers into the proper position after they have been inserted into the holes. This also makes removing the insert easier.

3. Be sure the pliers are securely inserted, then carefully lift the cup and place it into the sample chamber.

4. Replace the chamber cap.

Remove the insert/sample cup:

1. Remove the sample chamber cap and place on a clean work surface with the greased side facing upward.

2. Insert the pliers into the holes on the upper surface of the insert, then carefully lift the cup from the sample chamber.

3. Replace the chamber cap.

Calibrating Inserts

An insert must be calibrated and its operation verified since it essentially becomes a different size sample chamber. Appropriate calibration standards are included in the MultiVolume kits. For example, if you have a 100-cm^3 capacity AccuPyc and plan to use a 10-cm^3 insert, then you must calibrate the sample chamber with the 10-cm^3 insert, cup, and calibration standards.

1-, 10-, 3.5-, 35-, 650-, and 1300-cm^3 Inserts

These inserts are calibrated in the same manner as the sample chamber itself.

1. Remove the sample chamber cap.
2. Place the insert and sample cup into the sample chamber; replace the chamber cap.
3. Calibrate the insert following the steps in **Calibrating the Pycnometer** in Chapter 2.
4. Verify operation following the steps in **Verifying Operation** in Chapter 2.

0.1-cm^3 Insert

Because of the size of the 0.1-cm^3 insert, its calibration is performed in a different manner from that of other inserts.

If your 1-cm^3 pycnometer has not been calibrated recently, you should perform a calibration before calibrating the 0.1-cm^3 insert.

1. Remove the sample chamber cap.
2. Place the insert into the sample chamber (the sample cup is built into the insert); replace the chamber cap.
3. Press **Alt + 4** to access the **Analyze** function.

   Press **ENTER** until the **Chamber Insert** prompt is displayed;

   ```
   Unit[n]     SN1234   10 cm3
   Analyze
   Chamber insert?
   None
   ```

   Ensure that **None** is displayed.
4. Press **ENTER;** the **Analyze** prompt is displayed. Press **ENTER** again to begin the calibration.
5. After the calibration is complete, the **Reload** prompt is displayed.

6. Press **CHOICE** until the average measured volume is displayed; record the value.

7. Press **Alt + 2** to access **Setup**.

8. Press **CHOICE** until **Calibration Data** is displayed.

```
Unit[n]     SN1234     10 cm3

Set-up Type?
Calibration Data
```

9. Press **ENTER**; the **Chamber Insert** prompt is displayed.

10. Ensure that **None** is selected, then press **ENTER** to display the **Cell Volume** prompt.

11. Subtract the average volume of the 0.1-cm^3 insert/cup (recorded in Step 6) from the cell volume displayed in the prompt; record this value.

12. Press **ENTER** to display the **Expansion Volume** prompt; record the value displayed.

13. Record the value displayed for the expansion volume, then press **ENTER**. This returns you to the **Calibration Data** prompt.

14. Press **ENTER**; the **Chamber Insert** prompt is displayed.

15. Press **CHOICE** until **0.1 cm^3** is displayed, then press **Enter** to display the **Cell Volume** prompt. Enter the value you recorded in Step 11.

16. Press **ENTER** to display the **Expansion Volume** prompt; enter the value you recorded in Step 12.

17. Press **SAVE** to save the information you entered and return to the **Reload** prompt.

The pycnometer is now ready for analyses using the 0.1-cm^3 insert/cup.

K. MULTIGAS OPTION

The Multigas option enables you to use multiple gases with the AccuPyc without having to disconnect and reconnect each time you wish to use a different gas. The Multigas option connects to the gas inlet on the rear panel of the AccuPyc, providing connections for up to four gases.

The Multigas option consists of the following:

- valve assembly and two retaining screws
- gas entrance tubing for connection from the analyzer to the valve assembly
- gas supply tubing for four gases

Installing the Multigas Assembly

If you currently have a gas attached to the gas inlet on the rear panel of the analyzer, close the gas bottle valve and remove the inlet tubing from the analyzer before you begin installation. You can reattach the gas to one of the inlet valves on the assembly.

1. Remove the two retaining screws on the right side of the rear panel of the AccuPyc.

2. Position the valve assembly against the rear panel so that the retaining screw holes on the assembly align with those on the rear panel of the analyzer.

3. Attach the valve assembly to the rear panel using the two screws included in the Multigas kit. Do not use the retaining screws you removed from the analyzer (step 1); they are not long enough to hold the assembly in place.

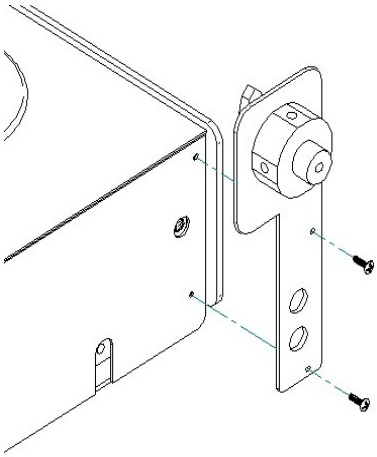

4. Cut and remove the cable ties holding the gas entrance tubing in position; this will allow flexibility for connecting to the analyzer.

5. Remove the protective caps from the ends of the gas entrance tubing, then remove the ferrules from the upper end of the tubing.

6. Remove the nut from the center port and slide it onto the end of the gas entrance tubing, then replace the front and rear ferrules. Be sure the ferrules are oriented as shown below.

7. Insert the tubing into the center port of the Multigas assembly; use the nut to secure the tubing to the assembly.

8. Insert the other end of the tubing into the gas inlet on the rear panel of the analyzer; use the self-contained swage nut to secure the tubing to the inlet.

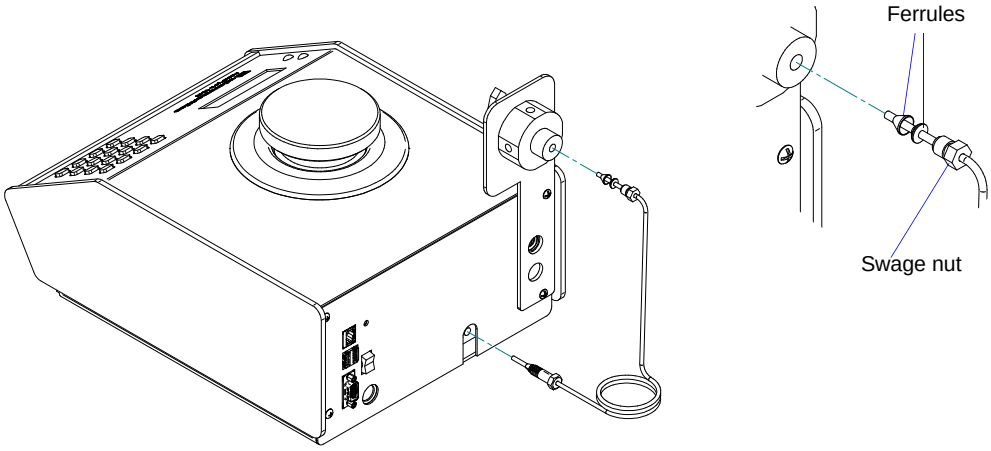

Connecting the Gas Supply

Four pieces of gas supply tubing are supplied, allowing you to connect up to four gases to the assembly.

1. Connect one end of the gas supply tubing to the gas supply (refer to **Rear Panel Connections** if you need assistance).

2. Insert the other end of the tubing into one of the valve inlets on the Multigas assembly.

3. The faceplate of the valve assembly contains four sections; one for each gas inlet on the assembly. Write the name of the gas in the applicable section. For example, label the inlet **He** for helium.

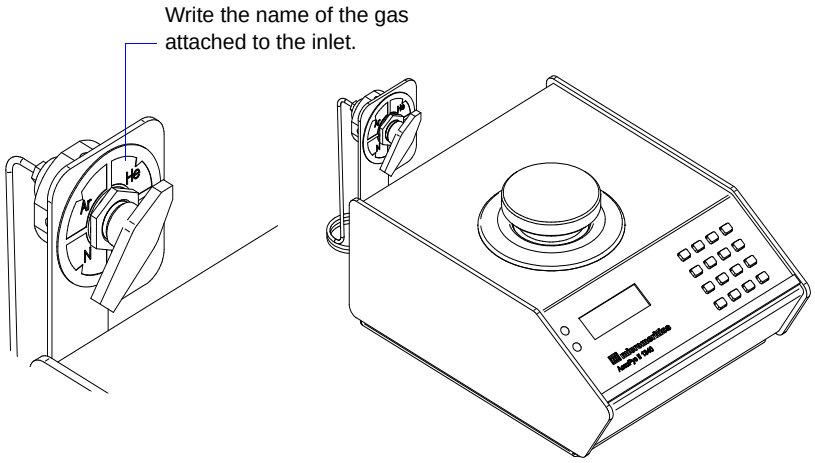

Selecting Gases

After you have the gases installed, use the knob to select the desired gas. Be sure to purge the gas lines when you change gases.

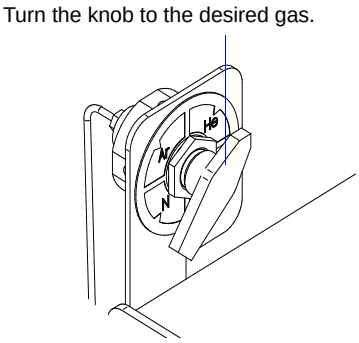

INDEX

D

E

F

G

H

I

K

L

M

N

O

P

R

S

T

U

V

W

X

Z