MICROMERITICS

Preinstallation Checklist and Instructions for the TriStar 3000

These Preinstallation Checklist and Instructions were reviewed and approved by:

Director, Quality Assurance

Marketing

Service Manager

MFP/mfp

micromeritics®

Revision History

REV	ECN #	DESCRIPTION OF CHANGE	CHK BY	DATE
-	030602	Formal Release	Kim Massengill	11/11/03
A		Added instructions for standard software as well as *confirm* software		

micromeritics®

TriStar 3000

Preinstallation Checklist and Instructions

300-42870-01

August 2004

Windows is a registered trademark of Microsoft Corporation.

Table of Contents

Overview

This document describes how to prepare your site for installation of the TriStar 3000 system. It contains instructions for both TriStar 3000 standard systems and TriStar 3000 ***confirm*** systems.

The document is organized into two parts: *TriStar 3000 Preinstallation Instructions* and *TriStar 3000 Preinstallation Checklist*. Each part contains two sections: 1.) *All TriStar 3000 Systems* and 2.) *TriStar 3000* ***confirm*** *Systems Only.* Follow the instructions and complete the checklist in Section 1 if you purchased a standard or a ***confirm*** system. If you purchased a ***confirm*** system, follow the instructions and complete the checklist in section 2 also.

The *TriStar 3000 Preinstallation Instructions* contain information that will help you analyze your site and answer the questions in the checklist.

The *TriStar 3000 Preinstallation Checklist* contains questions about your laboratory environment, equipment and supplies, and instrument location. For each question, check **Yes** if the condition applies to your laboratory or **No** if it does not.

When you have completed the checklist, fill in the Commitment Statement/Signature section, sign and date, and return the checklist to Micromeritics Service Center. This will ensure that the Service Representative arrives with the tools and information needed to install and verify the instrument's operation.

Conventions

This document uses the symbols shown below to identify notes of importance, cautions, and warnings.

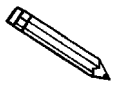

Notes contain a tip or important information pertinent to the subject matter.

Cautions contain information to help you prevent actions which could damage the instrument.

Warnings contain information to help you prevent actions which could cause personal injury.

TriStar 3000 Preinstallation Instructions

Section 1. All TriStar 3000 Systems

Instrument Space

The TriStar 3000 is designed to be installed on a lab or table top surface. The TriStar 3000 is 25 in. (64 cm) wide, 21 in. (53 cm) deep and 30 in. (76 cm) high. Provisions must be made for placement of the peripherals also. The unit weighs 100 lbs (45 kg).

Prior to installation, careful consideration should be given to the area in your lab where the TriStar 3000 and its associated components will be located.

Micromeritics considers a table top installation (shown below) where the front and rear of the instrument are open and easily accessible, and with the gas bottles placed behind the analyzer, to be the preferred choice. In this configuration, a greater amount of floor space is provided in front of the analyzer for routine tasks associated with sample preparation and analysis. Other benefits associated with this choice include easier access to the gas inlets and peripheral equipment connectors.

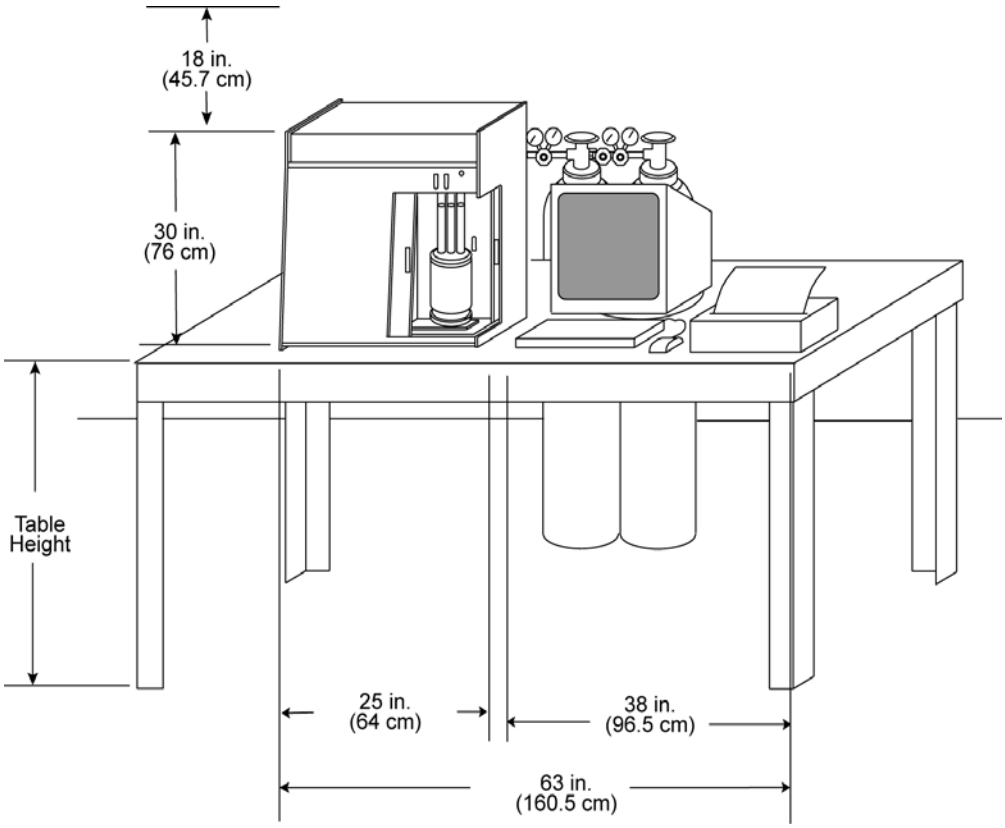

The lab table must accommodate the instrument and computer's combined width of 63 inches (160.5 cm) and depth of 21 inches (53 cm), and the width and depth of the peripheral equipment, such as the degas unit and vacuum pump.

The height of the TriStar 3000 is 30 inches (76 cm). In addition, 18 inches (45.7 cm) should be provided above the instrument for access to the top of the instrument, making it easier to do periodic maintenance and service. Inspect the area above the combined heights of the analyzer and table to ensure the absence of lab cabinets, air ducts, pipe, light fixtures, etc.

The lab must accommodate 1 square foot (0.30 square meters) for each gas bottle needed for installation and for any additional gas bottles needed after installation. For standard installation, the bottles must be within 6 feet (1.83 m) of the instrument.

Environmental Factors

Power

The TriStar 3000 is designed to operate with 100, 115, or 230 VAC ± 10% at 50 or 60 Hz. The instrument is shipped from the factory set for 115 VAC. Noise-free power of the correct voltage and frequency, with a safety earth ground, should be available through a standard wall receptacle. The power outlet should be able to supply 15 amps.

An additional outlet is needed for the vacuum pump.There should also be sufficient outlets for the computer, monitor, printer and any other peripheral devices.

These requirements can be checked by using a *Circuit Analyzer* (available at most hardware or electronic supply houses) or a multimeter. The preferred method uses the circuit analyzer. This device plugs directly into the wall receptacle and gives a visual or audible indication of the status of the receptacle. There are six different possibilities of wiring at the receptacle. They are as follows:

Open ground	**Open neutral**	**Open hot**	**Hot and ground reversal**	**Hot and neutral reversal**	**Correct wiring**
Fault	Fault	Fault	Fault	Fault	OK

The only wiring configuration acceptable for proper instrument operation is the block labeled **OK**, indicating correct wiring. If this condition cannot be met, contact the Electrical Department at your facility to remedy the wiring problem.

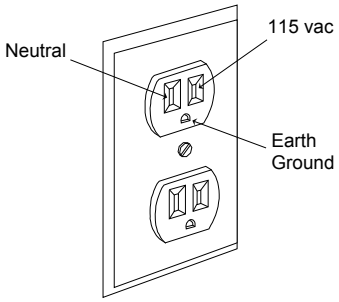

DO:
- Install the instrument on its own, dedicated power line.

DO NOT:
- Place other devices on the same power line; for example, motors, generators, or ovens.

Storage Space

Cabinet space should be made available for the storage of accessories and spare parts.

Temperature and Humidity

Temperature and humidity must be controlled to within the following: 10 to 30°C and 20% to 80% relative, non-condensing humidity. Office buildings are typically held within these limits.

DO NOT:
- Allow room temperature and humidity to exceed limits.
- Install the instrument where it is exposed to direct sunlight.
- Locate the instrument near air conditioning or heating vents.

Ventilation

The area reserved for installation of the TriStar 3000 should be well ventilated. Access to an exhaust hood or other external ventilation is strongly recommended.

Hazards & Precautions

Inform Micromeritics of any on-site conditions that may present hazards to Micromeritics' employees or equipment. Advise Micromeritics of any precautions that need to be taken.

Safety Measures

Inform Micromeritics of any safety equipment, requirements, or safety measures necessary for Micromeritics' employees to enter and install the TriStar 3000 at your facility.

Instrument and Accessories

Computer System

We recommend that you purchase the computer to be used with the TriStar 3000 Analyzer from Micromeritics. We thoroughly test Microsoft Windows® operating systems with our application and offer technical support and maintenance for the computers we provide.

If you are supplying your own computer, it must meet the following *minimum* requirements:

- Pentium 333 MHz computer (or equivalent)
- One CD ROM drive
- 128 megabytes of main memory
- 1-gigabyte hard disk space
- SVGA monitor (800 x 600 minimum resolution)
- Windows 2000 or Windows XP Professional
- One RS232 serial port for each attached instrument
- Mouse
- Printer that is IBM Graphics or Epson LQ compatible
- UPS for computer (optional)

The chances that computer problems will occur during installation are greatly reduced if you purchased your computer system from Micromeritics.

Micromeritics supports the computer system it sells.

If you did not purchase a computer system from Micromeritics for your instrument but wish to do so now, contact your local Micromeritics Sales Representative.

Potential Computer Problems

Micromeritics software has been tested on a wide variety of computers and Microsoft Windows 2000 and XP Professional operating systems. Micromeritics does not recommend, nor support, the use of a Windows or Windows NT based operating system other than Windows 2000 or XP Professional.

Computers not purchased from Micromeritics, which meet the requirements listed above, may still not function properly due to peripheral components (such as network cards, modems, or sound cards), which interfere with communications between the instrument and the computer.

If you did not purchase your computer from Micromeritics:

- Our service representative may install and test the instrument using a Micromeritics computer.
- Our service representative will attempt to connect your computer after installation and testing are complete. If your computer does not function properly, our service representative will not troubleshoot the computer. It is your obligation to ensure that your computer system is configured and working properly for TriStar 3000 installation.

The labor and expense costs associated with delays traceable to a computer system not purchased from Micromeritics are not part of a standard installation. You will be invoiced for these costs after the installation is completed.

Peripheral components included in many computer systems, (such as network cards, modems, sound cards) can frequently interfere with communications between the instrument and the computer. Micromeritics does not support or troubleshoot peripheral components that are not needed to communicate between the instrument and the computer.

Vacuum Pump

An external vacuum pump is required for sample analysis with the TriStar 3000. Any vacuum source achieving vacuum better than 20 x 10^{-3} mmHg at the instrument inlet may be used. An appropriate vacuum pump is available from Micromeritics.

The vacuum pump used with the TriStar 3000 should have an anti-suckback valve to prevent oil from being admitted to the instrument should the power fail while the system is under vacuum.

If the vacuum pump does not contain an anti-suckback valve, do not turn off the pump while the system is under vacuum.

Instrument and Accessories Verification

Using the packing list shipped with instrument, verify that all products, accessory items, options, software, and documentation are received intact and in the correct quantity.

Shipping Damage

Report any apparent shipping damage or any shortages first to the Carrier and then to Micromeritics. Insurance claims **MUST** be made with the Carrier, **NOT** Micromeritics.

DO:
- Keep all software, books, and manuals with the instrument.
- Keep all boxes and shipping containers until the installation is complete.
- Report any shipping damage immediately to the carrier and follow their directions.
- Report missing or wrong parts to Micromeritics, in addition to any shipping damage, only after filing a claim with the Carrier.

DO NOT:
- Ask Micromeritics to file a claim for shipping damages.
- Throw out shipping boxes and containers.

Gas Supply

Gas Bottles and Gas Supply Lines

See “Gases for Instrument Test” on page 12 for the analytical gases needed during installation.

Gas bottles must be placed within 6 feet (1.83 m) of the instrument’s rear or right side.

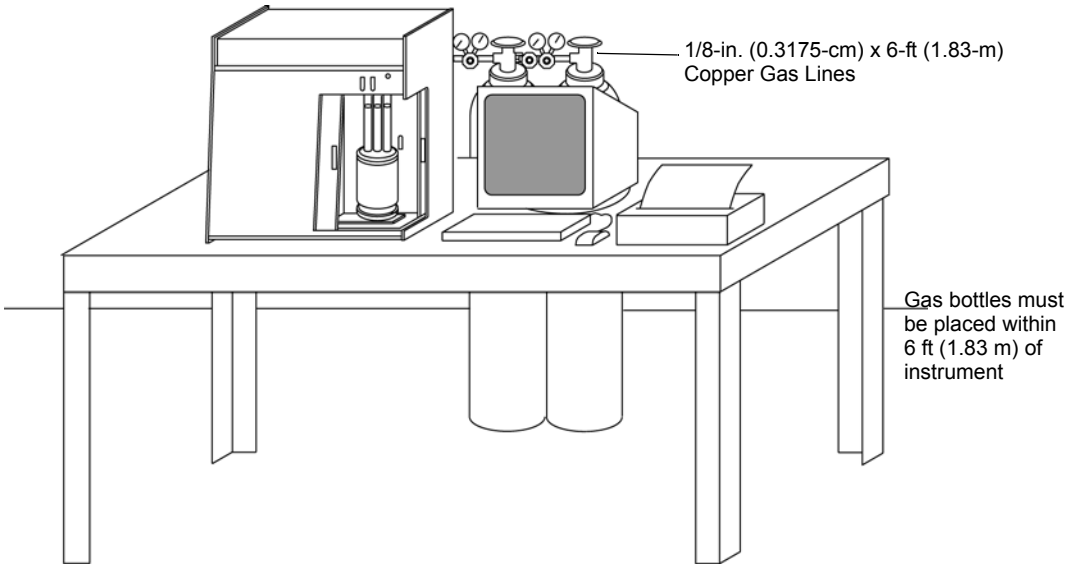

DO:

- Ensure purity of gases.
- Use the 1/8-in. (0.3175-cm) x 6-ft (1.83-m) copper gas lines supplied in the instrument accessories kit. Stainless steel gas lines are available from Micromeritics for use with gases that are not compatible with copper.

Gas lines not supplied by Micromeritics CANNOT be installed by Micromeritics Service Personnel.

DO NOT:

- Use gas bottles with less than 200 psig (1378.9 kPag) pressure.
- Use any other gas lines to connect the gas supply to the instrument.
- Use gas purifiers.

Gas supply lines that are made of materials other than copper or stainless steel will cause serious problems during installation or operation.

Gas purifiers frequently cause serious problems during installation.

Gas Supply Hardware

Micromeritics specifies only dual-stage regulators for use with its products. Most Micromeritics instruments consume a small quantity of gas during each analysis cycle, after which gas flow through the regulator stops. In this static condition, the outlet pressure of the gas regulator is expected to remain stable until the instrument requires more gas.

Micromeritics instruments operate best when the inlet gas pressure is maintained relatively constant; otherwise, overpressure conditions may cause leaks, overshooting of target pressures, long analysis times, or wasted gas.

Most available single-stage regulators are only designed to deliver a steady output pressure while delivering a constant, flowing stream of gas. It is very difficult for single-stage regulators to hold a steady output pressure with little or no gas flowing through them.

Under the same operating conditions, dual-stage regulators are better able to maintain a pressure setting, thus providing precise control of the pressure during analysis while the gas in the bottle is being consumed.

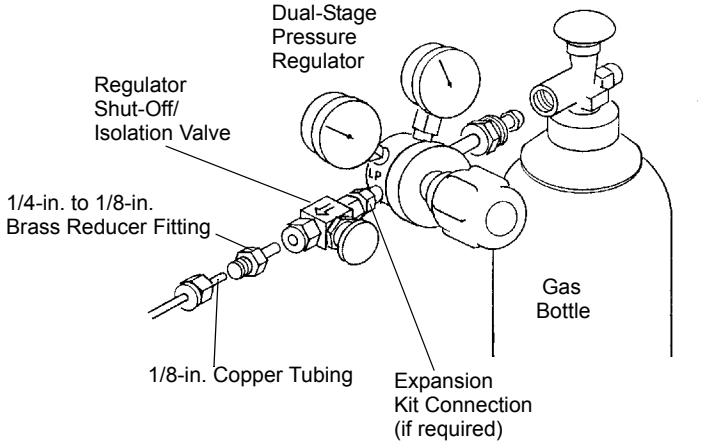

We recommend that you purchase the gas regulators to be used with the TriStar 3000 Analyzer from Micromeritics.The dual-stage regulators Micromeritics provides have been carefully evaluated and tested to provide superior performance.

If you choose to use regulators from a source other than Micromeritics, please keep in mind that many commercially available gas regulators lack key features, which are required for precise surface area and pore volume instruments. These four vital criteria must be met:

- **Cleanliness**. Clean regulators designed specifically for high vacuum service are required. Other regulators often contain elastomeric material or oils, which can contaminate the gas.
- **High Stability**. Excess pressure at the gas inlet ports to the instrument can interfere with accurate gas dosing and flow rates. The combined change in the outlet pressure from the gas regulator, as the gas cylinder pressure decreases or as the flow rate stops, should not change more than 5 psig (34.4 kPag) from the selected setting. When the instrument is idle for an extended period of time, such as 8 to 10 hours, this same stability of gas delivery pressures should be achieved.
- **Range of Pressure**. The regulator output must operate from 0 to 30 psig (206.8 kPag).
- **Suitable Subassemblies**. The regulator must have a shut-off or outlet isolation valve compatible with 1/8-in. (0.3175-cm) or 1/4-in. (0.6-cm) Swagelock compression fittings.

Improperly selected regulators will cause costly delays during the installation process, resulting in additional costs and wasted time.

If you did not purchase regulators from Micromeritics for your instrument but wish to do so now, contact your local Micromeritics Sales Representative.

Regulator Expansion Kits

It is sometimes beneficial to attach more than one instrument, and/or accessory device, to a single gas supply. Any time this is done, it is critically important that there be a means of isolating, or shutting-off, each device that is attached to the gas supply regulator. Micromeritics recommends the use of a vacuum rated shut-off/isolation valve for this purpose.

This shut-off/isolation valve is required in order to prevent problems when changing gas cylinders or servicing any of the devices attached to the gas supply.

If you anticipate the need to attach more than one instrument and/or accessory device to the gas supply, you must acquire one or more of the following regulator expansion kits.

004/33601/00 – Regulator Expansion Kit (2-outlet) – This kit contains one “T fitting”, two vacuum rated shut-off valves, and other necessary hardware.

For example, this expansion kit allows you to provide gas to two instruments or one instrument and one accessory device.

004/33601/01 - Regulator Expansion Kit (3-outlet) - This kit contains one “Cross fitting”, three vacuum rated shut-off valves, and other necessary hardware.

For example, this expansion kit allows you to provide gas to three instruments or two instruments and one accessory device.

Laboratory Equipment and Supplies

Liquid Nitrogen

Ensure liquid nitrogen is available in sufficient quantities. There should be at least 10 liters as a minimum requirement for starting an analysis.

DO:
- Ensure an adequate supply of liquid nitrogen.

DO NOT:
- Use liquid nitrogen which is bluish (a sign of Oxygen contamination) or not clear.

Analysis Equipment and Supplies

Since the analysis results are expressed in units of surface area per gram of sample, the true weight of the sample must be known. This requires an analytical balance with the capacity of 100 grams measurement and 1 mg readability.

In order to obtain accurate analysis results, the glassware (sample tube, filler rod, etc.) must be clean. The following items are suggested for cleaning glassware:

- Sink
- Small plastic tub for detergent solution
- Alconox or similar laboratory detergent
- Drying oven
- Ultrasonic bath
- Acetone or Isopropyl Alcohol
- Fume hood
- Clean, dry compressed air or dry nitrogen.

Application Related Issues

In order to ensure a thorough installation, it will be helpful for Micromeritics to know which types of samples you will be testing. If possible, please list those types on page 20 of the Checklist.

Please advise us if your samples require any pretreatment.

If required, do you have the proper equipment, such as a vacuum oven or furnace, to pretreat your samples?

Also, please indicate on the Checklist whether you have purchased any of the following degas units from Micromeritics: VacPrep, FlowPrep, or SmartPrep.

Micromeritics offers application assistance through our Materials Analysis Lab.

Gases for Instrument Test

In order to verify proper instrument operation and train your instrument users, Micromeritics representatives may choose to analyze one or more of the reference materials provided in the instrument accessories.

The gases listed in the following table are required in order to analyze the reference materials. If these gases are not available, Micromeritics representatives will only be able to perform a limited number of instrument tests during installation and operator training.

Please indicate on page 21 of the Checklist which gases you intend to provide during installation.

Analysis Type	Required Gases	Regulator Fitting	Required Purity
Nitrogen Surface Area	N_2	(CGA 580)	99.999%
	He	(CGA 580)	99.999%

Personnel Security Clearance

If security clearances, insurance certificates, or any other special arrangements are required for Micromeritics employees to enter your facility, please explain in detail on page 21.

Please inform Micromeritics how much advance notice you require to obtain clearance.

Projected Install Date

After reading the site preparation requirements in this document, select a date by which your site will be prepared, and on which you would like to schedule installation. Enter the date on page 21 of the Checklist.

After you return the Checklist to Micromeritics, your Micromeritics representative will contact you to confirm an installation date.

Commitment Statement/Signature

Micromeritics is not responsible for delays in installation due to incorrect site preparations.

Read this document carefully. If you are unsure about any part of this document or the checklist, please contact the Micromeritics Service Department for clarification. When you understand your responsibilities regarding site preparations for the instrument and believe the site is ready for the installation, sign the Preinstallation Checklist, date it, and FAX it to Micromeritics as described below.

Return the Preinstallation Checklist only. It is not necessary to return this instruction set.

Thank you for your time, patience, and assistance in preparing for this installation.

Within the United States

FAX Checklist to: Service Operations Manager
(770) 662-3604

OR

Mail Checklist to: Micromeritics Corporation
One Micromeritics Drive
Norcross, Georgia 30093

Attn: Service Operations Manager

Outside the United States

Contact your local Micromeritics representative.

Section 2. TriStar 3000 *confirm* Systems Only

Personnel Requirements

The TriStar 3000 *Confirm* Analysis System is comprised of:

- The TriStar 3000 Analyzer and its accessories
- Analysis software (referred to as the Micromeritics application)
- Administrator Utility software

The Administrator Utility software works in conjunction with Windows security to control access to the Micromeritics application. Windows security controls computer, directory, and file access. The Administrator Utility controls access to the Micromeritics application, and controls users' rights to perform tasks within the application.

The TriStar 3000 ***confirm*** system will be installed by a Micromeritics service representative, who will work with your laboratory personnel to ensure that the ***confirm*** application works in harmony with Windows to provide a secure, traceable, analysis system.

If the TriStar 3000 computer will be connected to a Local Area Network, your Network/ Windows administrator must be available to install the network connection. Also, if the TriStar 3000 files need to be accessible to a laboratory information system, file location will need to be discussed during installation.

The following table lists the functions and related capabilities necessary for a successful TriStar 3000 system installation The laboratory personnel responsible for each of these functions must be on-site and available during installation. After reviewing this table, complete the Personnel Requirements Checklist on page 23.

Function	Required Capability
Windows Administration	Ability to create and manage Windows user groups. Ability to create and manage Windows users. Must have Windows Administrator access. Must be available the first and last day of installation.
Network Administration	Ability to connect computer to network. Ability to correct network connection problems. Ability to set necessary network drive and directory access.
Micromeritics Application Administration	Must have Windows Administrator access to all directories. Must have basic understanding of Windows Groups and Windows Users.

The following table lists the procedures performed during installation and the personnel responsible for each procedure.

Step	Description	Installer	Network/ Windows Administrator	Micromeritics Application Administrator
1	Install computer on network (if necessary)		✓	
2	Install Micromeritics application	✓	✓	
3	Discuss file location	✓	✓	
4	Test setup	✓	✓	
5	Run the Administrator Utility			✓
6	Define password configuration in Administrator Utility			✓
7	Define user profiles in Administrator Utility			✓
8	Start Micromeritics application	✓		

User Information Requirements

The Administrator Utility restricts access to the Micromeritics application by enabling the Micromeritics application administrator to assign one of these profiles to users:

Administrator Profile - enables the user to install and maintain the Micromeritics application and updates, and use the Administrator Utility to establish and control user access accounts. The Administrator is required to have administrative access to the Windows workstation.

Developer Profile - enables the user to develop and enter analysis methods. The Developer has access to all functions of the Micromeritics application.

Analyst Profile - enables the user to perform analyses using pre-defined analysis methods (referred to as *templates*). The Analyst has access to a limited set of the Micromeritics application features.

Each user profile contains this information:

- User Name
- Full Name
- Password
- Password Change Date
- Access Level (Administrator, Developer, or Analyst)

To streamline the installation process, it is a good practice to identify the Micromeritics application users and determine their profiles prior to installation. The table below lists the Micromeritics application functions that can be performed by users with each profile.

Function	Administrator	Developer	Analyst
Install Micromeritics application updates	✓		
Control Micromeritics application access using the Administrator Utility	✓		
View and export the system log	✓		
Create sample records from templates		✓	✓
Analyze samples		✓	✓
Generate reports		✓	✓
List and print sample records and templates		✓	✓
Perform routine maintenance		✓	✓
Enable manual control when the instrument is idle (if applicable)		✓	✓
Change limited analysis conditions before performing an analysis		✓	✓
Change report options after an analysis		✓	✓
Create analysis methods (templates) for analyst use		✓	
Perform all other Micromeritics application functions		✓	

TriStar 3000 Preinstallation Checklist

Section 1. All TriStar 3000 Systems

Instrument Space

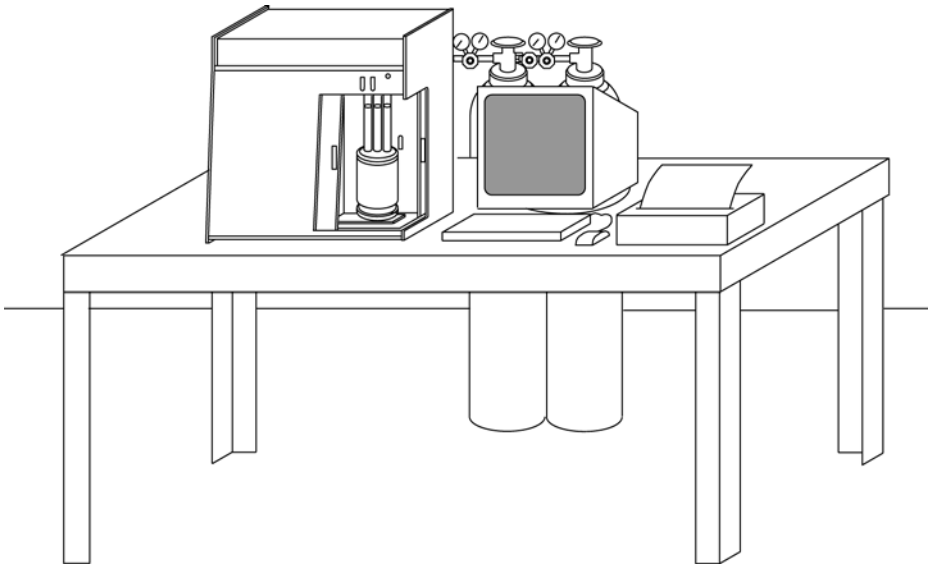

Instrument Location	Refer to page	Yes	No
Will the instrument be placed on a surface which allows access to the front and back?	2	___	___
Can the lab area where the instrument and computer will be placed accommodate the combined analyzer and computer width of 63 inches (160 cm), plus the width required for any peripheral equipment, such as a degas unit?	2	___	___
Can the lab table accommodate the instrument depth requirement of 21 inches (53 cm), plus any additional depth required for peripheral equipment?	2	___	___
Are there any obstructions in the space above the combined heights of the table and analyzer?	2	___	___
Can the lab accommodate 1 square foot (0.30 square meters) for each gas bottle needed?	2	___	___

Environmental Factors

Environmental Factor	Refer to page	Yes	No
Is power installed with correct voltage and frequency, and a safety earth ground?	3	___	___
Is storage space available for the accessories?	4	___	___
Are temperature and humidity controlled within recommended specifications?	4	___	___
Is the area reserved for installation well ventilated?	4	___	___
Are hazards present or precautions necessary in area of installation? If **Yes**, please explain_____ _____ _____	4	___	___
Are safety measures required? If **Yes**, please explain_____ _____ _____	5	___	___

Instrument and Accessories

Instrument and Accessories	Refer to page	Yes	No
Was the computer purchased from Micromeritics?	5	___	___
If **NO**, does the computer meet Micromeritics' minimum requirements?	5	___	___
Do you have a vacuum pump?	6	___	___
Are all products, options, and quantities ordered present and undamaged?	7	___	___
Has any apparent shipping damage been reported to the Carrier?	7	___	___
Has Micromeritics been notified of any missing items or damage?	7	___	___

Gas Supply

Item	Refer to page	Yes	No
Are gas cylinders located within 6 feet (1.8 m) of the area where the instrument will be installed?	8	___	___
Were dual-stage gas regulators purchased from Micromeritics?	9	___	___
If **NO**, do your dual-stage gas regulators meet Micromeritics' specifications?	9	___	___
Will installation of the instrument require one or more Regulator Expansion Kits?	10	___	___
If **YES,** do you have the regulator expansion (kit)s available?		___	___

Laboratory Equipment and Supplies

Item	Refer to page	Yes	No
Is liquid nitrogen available in sufficient quantities	11	___	__
Do you have an analytical balance with the capacity of 100 grams measurement and 1 mg readability?	11	___	___
Do you have the following items suggested for cleaning glassware?	11		
• Drying oven		___	___
• Ultrasonic bath		___	___
• Acetone or Isopropyl Alcohol		___	___
• Fume hood		___	___
Is a vacuum oven available to pretreat samples (if required)?	11	___	___

Application Related Issues

Application Issue	Refer to page	Yes	No
What types of samples will you be testing? _____ _____ _____ _____	12	___	___
Did you purchase a FlowPrep?	12	___	___
Did you purchase a VacPrep?	12	___	___
Did you purchase a SmartPrep?	12	___	___
Will these samples require pretreatment?	12	___	___
Will you require any application assistance from Micromeritics Materials Analysis Laboratory?	12	___	___

Gases for Instrument Test

Required Gases	Refer to page	Yes	No
(CGA 580) N_2 99.999% (CGA 580) He 99.999%	12	___ ___	___ ___

Personnel Security Clearance

Security Clearance	Refer to page	Yes	No
Are there any special arrangements required concerning security clearance? If **Yes**, please explain in detail _____ _____ _____ _____	12	___	___

Projected Install Date

When would installation be most convenient? Date: ____/____/____
(This is not a commitment for a specific installation date.)

Commitment Statement/Signature

I have read this document and understand my responsibilities regarding preparations for the installation of our instrumentation. I believe this site to be ready for the TriStar 3000 Analyzer to be installed.

SIGNATURE: _____

NAME (Printed): _____

TITLE (Printed): _____

COMPANY: _____

CITY, STATE and ZIP: _____

PHONE NUMBER: _____

DATE: _____

INSTRUMENT MODEL _____ SERIAL NUMBER_____

Section 2. TriStar 3000 *confirm* Systems Only

Complete this section **only** if you purchased a TriStar 3000 ***confirm*** System.

Personnel Requirements

In order to install and operate the TriStar 3000 *Confirm* Analysis System, the laboratory personnel responsible for the functions listed below must be identified and available during the installation process.

Please provide the names of the persons who will be responsible for these functions during installation and operation of the instrument.

Function	Person Responsible	Refer to page	Yes	No
Windows Administration	_____	14		
Does the administrator have the ability to create and manage Windows user groups?			___	___
Does the administrator have the ability to create and manage Windows users?			___	___
Does the administrator have Windows Administrator access?			___	___
Will the Windows administrator be available the first and last day of installation?			___	___
Network Administration	_____	14		
Will the TriStar computer be connected to a Local Area Network (LAN)?			___	___
If yes:				
Does the administrator have the ability to connect the computer to the network?			___	___
Does the administrator have the ability to correct network connection problems?			___	___
Does the administrator have the ability to set necessary network drive and directory access?			___	___

Function	Person Responsible	Refer to page	Yes	No
Will TriStar 3000 files need to be accessible to a laboratory information application?			___	___
If yes: Does the administrator have the necessary file permissions?			___	___
Will the administrator be available during installation?			___	___
Micromeritics Application Administration	_____	14		
Does the administrator have access to all directories?			___	___
Does the administrator have a basic understanding of Windows Groups and Windows Users?			___	___
Will the administrator be available during installation?			___	___

User Information Requirements

Function	Refer to page	Yes	No
Have the TriStar application users been entered in the Administrator Utility User Profiles Worksheet (located on the following page)?	15	___	___

Administrator Utility User Profiles Worksheet

The worksheet below can be used to identify the application users and their profiles in preparation for installation.

Application User	Administrator	Developer	Analyst
Name:_____ **Full Name:**_____ **Windows User ID:**_____			
Name:_____ **Full Name:**_____ **Windows User ID:**_____			
Name:_____ **Full Name:**_____ **Windows User ID:**_____			
Name:_____ **Full Name:**_____ **Windows User ID:**_____			
Name:_____ **Full Name:**_____ **Windows User ID:**_____			
Name:_____ **Full Name:**_____ **Windows User ID:**_____			

Application User	Administrator	Developer	Analyst
Name:_____ **Full Name:**_____ **Windows User ID:**_____			
Name:_____ **Full Name:**_____ **Windows User ID:**_____			
Name:_____ **Full Name:**_____ **Windows User ID:**_____			
Name:_____ **Full Name:**_____ **Windows User ID:**_____			
Name:_____ **Full Name:**_____ **Windows User ID:**_____			
Name:_____ **Full Name:**_____ **Windows User ID:**_____			
Name:_____ **Full Name:**_____ **Windows User ID:**_____			